Data sheet

MPC 12/17/07 7035

Weidmüller Interface GmbH & Co. KG
Klingenbergstraße 26
D-32758 Detmold
Germany

www.weidmueller.com

Small and medium-sized polycarbonate enclosures
The polycarbonate enclosures of the MPC series are ideal for building into electrical, electromechanical and pneumatic devices as well as PCBs. The enclosures are used in situations with extreme mechanical and chemical conditions.
Features:

- 17 sizes in 2 versions
- Grey or transparent cover
- Cover with lead-seal holes
- Mounting holes outside the seal area
- Receptacle threads for rail mounting, mounting plates and circuit board
- Comprehensive accessories
- Weidmüller can manufacture and supply the enclosure to match customer specifications, fitted with all necessary terminals and cable glands.

General ordering data

Version	MPC (polycarbonate empty enclosure), Empty enclosure, Height: 125 mm, Width: 175 mm, Depth: 75 mm, Basic material: Polycarbonate, untreated, Light Grey
Order No.	9535290000
Type	MPC 12/17/07 7035
GTIN (EAN)	4032248009183
Qty.	1 items

MPC 12/17/07 7035

Weidmüller Interface GmbH & Co. KG
Klingenbergstraße 26
D-32758 Detmold
Germany

www.weidmueller.com

Technical data

Approvals

ROHS	Conform

Dimensions and weights

Depth	75 mm	Depth (inches)	2.9527 inch
Height	125 mm	Height (inches)	4.9212 inch
Width	175 mm	Width (inches)	6.8898 inch
Net weight	373 g		

Temperatures

Operating temperature	-50 °C...130 °C

Environmental Product Compliance

RoHS Compliance Status	Compliant without exemption
REACH SVHC	No SVHC above 0.1 wt%

Cable glands, right

M16	4	M20	4
M12	6		

Cable glands, top/bottom

M20	3	M12	4
M16	3		

Certificate numbers enclosure

Declaration of Conformatiy No. (DoC LVD)	DoC DE PS2420 201008 001ISS00

General information

Material thickness	3.5 mm	Operating temperature, max.	130 °C
Operating temperature, min.	-50 °C	Lid attachment	4 polyamide crosshead screws
Installation advice	Screw mounting	Surface finish	untreated
Impact resistance	IK08	Protection degree	IP66, IP67
Basic material	Polycarbonate	Seal material	Polyurethane
Torque for lid screws	0.8 Nm	Integral fixing	thanks to self-tapping screws
Enclosure attachment	Holes 4.5 mm	Number of lid screws	4
Access opening: width	171.5 mm	Flange plate	No
Lid	Yes	Access opening: height	121.5 mm
Areas of use	Building systems and technology, Transportation, Packaging industry, Machine construction		

horizontal assembly

WDU 10 / ZDU 10	1x11	WDU 2,5 / ZDU 2,5 / IDU 2,5	1x22
WDU 4 / ZDU 4	1x19	WDU 6 / ZDU 6	1x14

MPC 12/17/07 7035

Weidmüller Interface GmbH & Co. KG
Klingenbergstraße 26
D-32758 Detmold
Germany

www.weidmueller.com

Technical data

vertical assembly

WDU 10 / ZDU 10	1x11	WDU 2,5 / ZDU 2,5 / IDU 2,5	1x22
WDU 4 / ZDU 4	1x19	WDU 6 / ZDU 6	1x14

Classifications

ETIM 8.0	EC000261	ETIM 9.0	EC000261
ETIM 10.0	EC000261	ECLASS 14.0	27-18-01-01
ECLASS 15.0	27-18-01-01		

MPC 12/17/07 7035

Weidmüller Interface GmbH & Co. KG
Klingenbergstraße 26
D-32758 Detmold
Germany

www.weidmueller.com

Drawings

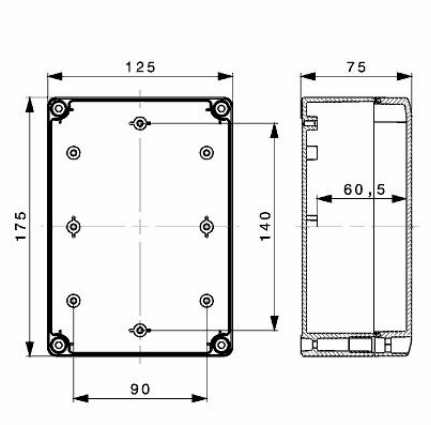

Weidmüller Interface GmbH & Co. KG
Klingenbergstraße 26
D-32758 Detmold
Germany

www.weidmueller.com

Accessories

Fixing Material

Accessories

General ordering data

Type	SC MPC	Version
Order No.	9535640000	MPC (polycarbonate empty enclosure), Mounting screw, Screws,
GTIN (EAN)	4032248009428	Height: 12.5 mm, Width: 7 mm, Depth: 12.5 mm, Basic material:
Qty.	100 ST	Steel, galvanised

Hinge

MPC series, hinges, set of 2

General ordering data

Type	HG MPC	Version
Order No.	9535590000	MPC (polycarbonate empty enclosure), External joint, Hinge, Basic
GTIN (EAN)	4032248009329	material: Plastic
Qty.	1 ST	

External fixing lugs

External attachment lugs 4-part set

General ordering data

Type	MF MPC	Version
Order No.	9535600000	MPC (polycarbonate empty enclosure), Mounting foot, Fixing lugs,
GTIN (EAN)	4032248009381	Height: 30 mm, Width: 15 mm, Depth: 10 mm, Basic material: Plastic
Qty.	1 ST	

Weidmüller Interface GmbH & Co. KG
Klingenbergstraße 26
D-32758 Detmold
Germany

www.weidmueller.com

Accessories

Klippon® POK earthing stud

The Klippon® POK enclosure range is made from a high-quality glass fibre reinforced polyester and is ideal for applications and environments where corrosion resistance, impact resistance and a high IP protection class are a requirement.
Key features of the extensive product range:
- Available in 17 sizes
- Two standard finishes (colours): grey (similar to RAL 7001 for industrial use) and black (similar to RAL 9011 for harsh environments, Ex)
- Cover with stainless steel screws in cross-head / slotted design
- Moulded gasket made of silicone or chloroprene
- Fixing holes outside the sealed area to ensure high ingress protection of IP66
- Impact resistance up to 7 Joules
- Mounting directly in the enclosure or using an internal mounting plate
- Direct wall mounting possible using fixing holes or mounting feet
- Fastening thread to attach mounting rails and plates
- Up to E60 fire rating dependent on the configuration
- Weidmüller can manufacture and supply this enclosure to match customer specifications - fitted with all necessary terminals and cable glands.

General ordering data

Type	PEBZ M10 S4 SET	Version
Order No.	1283440000	Klippon POK (polyester empty enclosure), Earthing stud,
GTIN (EAN)	4050118073362	Miscellaneous, Height: 21 mm, Width: 21 mm, Depth: 48.7 mm,
Qty.	1 ST	Basic material: Stainless steel 1.4404 (316L)

Earthing stud

Earthing bolts to exchange as a complete component in two versions – brass and stainless steel.

General ordering data

Type	PEBZ M10 BR SET	Version
Order No.	1277220000	Klippon POK (polyester empty enclosure), Earthing stud,
GTIN (EAN)	4050118067019	Miscellaneous, Height: 21 mm, Width: 21 mm, Depth: 48.7 mm,
Qty.	1 ST	Basic material: Brass

Weidmüller Interface GmbH & Co. KG
Klingenbergstraße 26
D-32758 Detmold
Germany

www.weidmueller.com

Accessories

Klippon® POK earthing stud

The Klippon® POK enclosure range is made from a high-quality glass fibre reinforced polyester and is ideal for applications and environments where corrosion resistance, impact resistance and a high IP protection class are a requirement.
Key features of the extensive product range:
- Available in 17 sizes
- Two standard finishes (colours): grey (similar to RAL 7001 for industrial use) and black (similar to RAL 9011 for harsh environments, Ex)
- Cover with stainless steel screws in cross-head / slotted design
- Moulded gasket made of silicone or chloroprene
- Fixing holes outside the sealed area to ensure high ingress protection of IP66
- Impact resistance up to 7 Joules
- Mounting directly in the enclosure or using an internal mounting plate
- Direct wall mounting possible using fixing holes or mounting feet
- Fastening thread to attach mounting rails and plates
- Up to E60 fire rating dependent on the configuration
- Weidmüller can manufacture and supply this enclosure to match customer specifications - fitted with all necessary terminals and cable glands.

General ordering data

Type	PEBZ M6 BR SET	Version
Order No.	1277250000	Klippon POK (polyester empty enclosure), Earthing stud,
GTIN (EAN)	4050118067149	Miscellaneous, Height: 12.3 mm, Width: 12.3 mm, Depth: 42 mm,
Qty.	1 ST	Basic material: Brass

Earthing stud

Accessories

General ordering data

Type	PEBZ M6 S4 SET	Version
Order No.	1283430000	Klippon POK (polyester empty enclosure), Earthing stud,
GTIN (EAN)	4050118073607	Miscellaneous, Height: 12.3 mm, Width: 12.3 mm, Depth: 42 mm,
Qty.	1 ST	Basic material: Stainless steel 1.4404 (316L)

Weidmüller Interface GmbH & Co. KG
Klingenbergstraße 26
D-32758 Detmold
Germany

www.weidmueller.com

Accessories

Mounting support

We offer a broad portfolio of mounting support for easy handling and supplementation of our products. From various tools to insulating sleeves and various screws, our components are matched to each other down to the last detail and thus facilitate assembly in compliance with the respective standards and protective regulations.

General ordering data

Type	FKSC M4X6 D8/SW2	Version
Order No.	1567480000	SAK Series, Allen hex screw, Screws, Number of poles: 1
GTIN (EAN)	4008190033491	
Qty.	100 ST	

Ventilation plugs - DAE

In addition to cable glands for a wide range of applications, the product portfolio is rounded off by plugs, pressure compensation elements, adaptors and the corresponding accessories such as locknuts, sealing rings, flat washers and earthing rings.

General ordering data

Type	DAE M12 SS	Version
Order No.	1868550000	DAE (ventilation element), Compensating element, straight, M 12, 10
GTIN (EAN)	4032248440405	mm, IP66, IP68, IP69K, Stainless steel 1.4305 (303)
Qty.	10 ST	
Type	DAE M12 PA LONG	Version
Order No.	1868570000	DAE (ventilation element), Compensating element, straight, M 12, 10
GTIN (EAN)	4032248440429	mm, IP66, IP68, IP69K, Polyamide 6
Qty.	10 ST	

MPC

Mounting plates, 1.5 mm sheet steel, galvanised

Weidmüller Interface GmbH & Co. KG
Klingenbergstraße 26
D-32758 Detmold
Germany

www.weidmueller.com

Accessories

General ordering data

Type	MP MPC 12/17	Version
Order No.	9535560000	MPC (polycarbonate empty enclosure), Mounting plate, Mounting
GTIN (EAN)	4032248009299	plate, Height: 125 mm, Width: 175 mm, Basic material: Sheet steel,
Qty.	1 ST	galvanized, galvanized

TS 15

Accessories

General ordering data

Type	TS15X5 ST MPC1217 VER	Version
Order No.	8000037598	Rail, TS 15, Width: 4.13 mm, without slot, Steel, galvanized,
GTIN (EAN)	4050118653106	chromium-plated
Qty.	20 ST	

TS 35

Accessories

General ordering data

Type	TS35X7.5 ST MPC1725 VER	Version
Order No.	8000037600	Rail, TS 35, TS 35 x 7.5, Width: 90 mm, without slot, Steel, galvanic
GTIN (EAN)	4050118653120	zinc plated and passivated
Qty.	20 ST	