Data sheet

SAI-4-F 4P PUR 20M

Weidmüller Interface GmbH & Co. KG
Klingenbergstraße 26
D-32758 Detmold
Germany

www.weidmueller.com

M12 distributors are available in various versions. The 4, 6 or 8 M12 slots are in 4 or 5 pole design. The group outlet is designed as a fixed cable version, hood version for connection by the user, or with M23. Special versions are also available. For instance, there are 1-to-1 distributors for use with any connection types, or distributors approved for Ex Zone 1.

General ordering data

Version	Fixed cable version, M12, 30 V, A-coded, LED: Yes, LED initiator: Yes, Wiring type: PNP, 20 m
Order No.	9456230000
Type	SAI-4-F 4P PUR 20M
GTIN (EAN)	4008190304225
Qty.	1 items

SAI-4-F 4P PUR 20M

Weidmüller Interface GmbH & Co. KG
Klingenbergstraße 26
D-32758 Detmold
Germany

www.weidmueller.com

Technical data

Approvals

Approvals	cULus
ROHS	Conform
UL File Number Search	UL Website
Certificate No. (cURus)	E141197

Dimensions and weights

Depth	102 mm	Depth (inches)	4.0157 inch
Height	25 mm	Height (inches)	0.9842 inch
Width	60 mm	Width (inches)	2.3622 inch
Net weight	1500.4 g		

Temperatures

Operating temperature	-20 - 80°C

Environmental Product Compliance

RoHS Compliance Status	Compliant without exemption
REACH SVHC	No SVHC above 0.1 wt%

Connection data

Sheathing stripping length	100 mm	Distributor outlet	Fixed cable version

Electrical data

Rated voltage, min.	10 V	Rated voltage, max.	30 V
Test voltage	1 kV	Max. current-carrying capacity per slot	4 A
Total current	9 A	Current per signal	2 A
Electrical isolation available	No	Insulation resistance	109 Ω

General technical data

Protection degree	IP68	Plug-in station coding	A-coded
Number of poles	4	Number of contact sockets	4
Connection thread	M12	Pollution severity	3
Fire behaviour	V-0	Plugging cycles	≤ 50
LED	Yes	LED initiator	Yes
LED colour for indicating operation	green	LED colour for I/O function	yellow

Material data

Housing main material	Pocan	Material of distributor	Plastic
Housing colour	grey, RAL 7032	Hood sealing material	Viton
Screw socket	Nickel-plated CuZn	Contact material	CuZn
Contact surface	Gold-plated	Contact carrier material	PBT (UL 94 V0)

Technical data cable

Number of poles	4	Sheathing colour	black
O.D.	7.5 mm	Shielded	No

SAI-4-F 4P PUR 20M

Weidmüller Interface GmbH & Co. KG
Klingenbergstraße 26
D-32758 Detmold
Germany

www.weidmueller.com

Technical data

Halogen	No	Bending radius, min., moving	10 x cable diameter
Bending cycles	2 Mio	Wire cross section (Print/Online)	16 x 0.34 mm² + 3 x 1.0 mm²
Sheath material	PUR	Colour coding	white, grey, green, yellow, blue, brown, Green/yellow
Cable length	20 m	Suitable for cable carriers	Yes

Classifications

ETIM 8.0	EC002585	ETIM 9.0	EC002585
ETIM 10.0	EC002585	ECLASS 14.0	27-44-01-08
ECLASS 15.0	27-44-01-08		

SAI-4-F 4P PUR 20M

Weidmüller Interface GmbH & Co. KG
Klingenbergstraße 26
D-32758 Detmold
Germany

www.weidmueller.com

Drawings

Dimensioned drawing

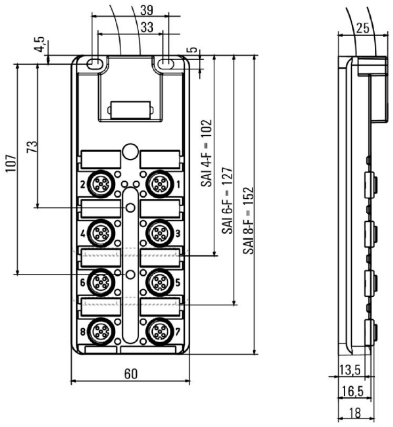

Wiring diagram

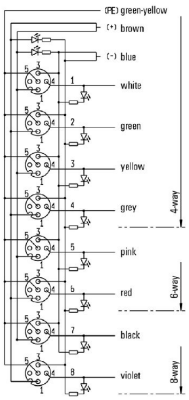

SAI-4-F 4P PUR 20M

Weidmüller Interface GmbH & Co. KG
Klingenbergstraße 26
D-32758 Detmold
Germany

www.weidmueller.com

Accessories

M12

Protective caps protect unassigned plug-in stations against external influences.

General ordering data

Type	SAI-SK-M12	Version
Order No.	9456050000	Protected component assemblies, Protective cap
GTIN (EAN)	4008190304058	
Qty.	30 ST	

Screwty® cable gland tool with torque function

The ideal tool for any application
Screwty® is the ideal, all-purpose tool for tightening all common sensor and actuator cables. Even difficult-to-reach round plugs are accessible using the Screwty®. A simple turning movement tightens and loosens the connectors without the need for excessive force. The Screwty® is a unique and global solution since it fits with most cables and plugs from other vendors (over 90 %). The Screwty® consists of a handle with a conventional 1/4" adapter. Thus it can be used for all sizes: for M12 and M8 round plug-in connectors, and for M12F and M8F customisable plugs and sockets, as well as for all M23 plugs and sockets.

General ordering data

Type	SCREWTY SET -DM	Version
Order No.	1920000000	Cable gland tool for M8, M12 lines and connectors
GTIN (EAN)	4032248436859	
Qty.	1 ST	

SAI-4-F 4P PUR 20M

Weidmüller Interface GmbH & Co. KG
Klingenbergstraße 26
D-32758 Detmold
Germany

www.weidmueller.com

Accessories

Blank

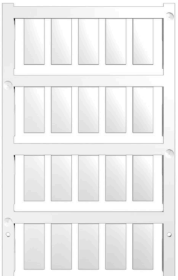

ESG is the tried-and-tested marker in MultiCard format for use on many well-known electrical devices. The result is high-quality device marking with a high-contrast appearance.
Various types are available for devices from manufacturers like Siemens, ABB, Beckhoff etc.
Advantages at a glance:

- Tags for universal usage, self-adhesive or clip-on tags, depending on type
- For aligned equipment, e.g. circuit breakers, we supply ESG markers for clipping onto tag rails
- Individual laser-quality printing according to specifications

For custom printing: Please send us a file of our labeling software M-Print PRO or M-Print PRO Online (without installation) for your labeling specifications.

General ordering data

Type	ESG 9/20 MC NE WS	Version
Order No.	1609940000	ESG, Device markers x 20 mm, PA 66, Colour: white, pluggable
GTIN (EAN)	4008190203528	
Qty.	200 ST	