Data sheet

SAIL-VSCD-M12G-0.6U

Weidmüller Interface GmbH & Co. KG
Klingenbergstraße 26
D-32758 Detmold
Germany

www.weidmueller.com



Weidmüller can supply valve plugs as connecting lines with M8/M12 plugs and one end without connector. The status of the valve plug is shown by an LED. The valve plugs have a protective circuit. The Weidmüller range includes valve plugs of type A, B and C to DIN and industry standards. Protection class IP 67 is fulfilled when screwed in. The outlet direction is also a decisive factor, therefore Weidmüller offers different versions.

General ordering data

Version	Valve cable (assembled), Straight plug - valve plug, DIN design C (8 mm), M12 = A-coded, Cable length: 0.6 m, PUR, black
Order No.	9456170060
Type	SAIL-VSCD-M12G-0.6U
GTIN (EAN)	4032248281343
Qty.	1 items
Delivery status	This article will no longer be available in the future.
Last order date	2027-02-28T00:00:00+01:00

Data sheet

SAIL-VSCD-M12G-0.6U

Weidmüller Interface GmbH & Co. KG
Klingenbergstraße 26
D-32758 Detmold
Germany

www.weidmueller.com

Technical data

Approvals

Approvals	
ROHS	Conform

Dimensions and weights

Net weight	43 g

Environmental Product Compliance

RoHS Compliance Status	Compliant with exemption
RoHS Exemption (if applicable/known)	6c
REACH SVHC	Lead 7439-92-1
SCIP	4060c755-8d0b-4d43-bdb3-4ffabe9d7497

Technical specifications for cable

Cable length	0.6 m	Sheathing colour	black
Suitable for cable carriers	Yes	Core cross-section	0.5 mm²
Shielded	No	Halogen	No
Insulation	PP	Acceleration	5 m/s²
Bending radius, min., moving	10 x cable diameter	Bending radius, min., stationary	5 x cable diameter
Bending cycles	2 Mio	Speed	200 m/s
Sheath material	PUR	Welding spark resistance	No
Colour coding	brown, blue, Green/yellow	Torsion resistance	0 °/m
Temperature range, stationary	-50...80 °C	Resistant to welding beads	No
Temperature range, moving	-25...80 °C	Number of poles	3
Outside diameter	4.6 mm ± 0.2 mm		

General technical data

Coding	DIN design C (8 mm), M12 = A-coded	Connection thread	Miscellaneous
Contact surface	tinned	LED	Yes
Version	Straight plug - valve plug	Contact material	CuZn
Nominal voltage	24 V	Nominal current	4 A
Protection degree	IP67, when screwed in	All valve plugs are fitted with protective circuits	Zener diode
Temperature range of housing	-25...+80 °C	Tightening torque	Mounting screw M3: 0.4 Nm, M2.5 mounting screw: 0.3 Nm, M12: 0.8 - 1.2 Nm

Classifications

ETIM 8.0	EC001855	ETIM 9.0	EC001855
ETIM 10.0	EC001855	ECLASS 14.0	27-06-03-12
ECLASS 15.0	27-06-03-12		

SAIL-VSCD-M12G-0.6U

Weidmüller Interface GmbH & Co. KG
Klingenbergstraße 26
D-32758 Detmold
Germany

www.weidmueller.com

Drawings

Dimensioned drawing

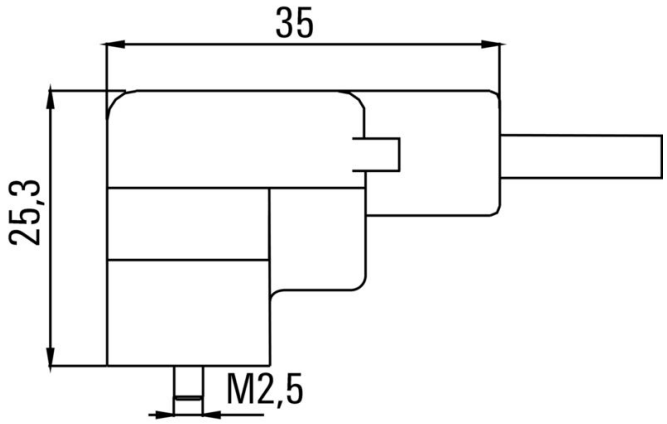

Dimensioned drawing

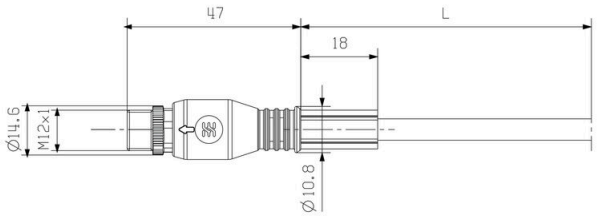

Pole scheme

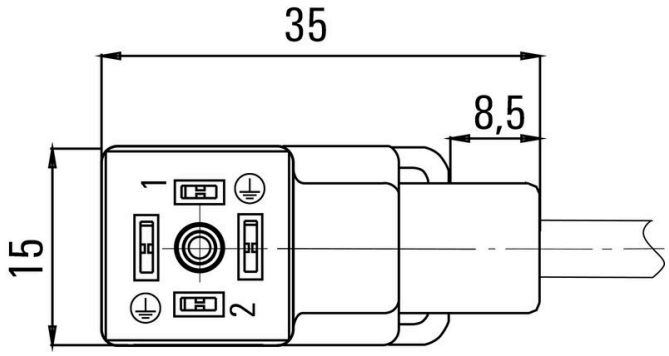

Pole scheme

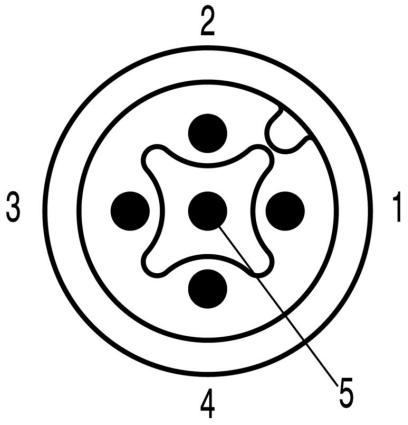

Wiring diagram

