Data sheet

TOP 5VDC/48VDC 0,1A

Weidmüller Interface GmbH & Co. KG
Klingenbergstraße 26
D-32758 Detmold
Germany

www.weidmueller.com

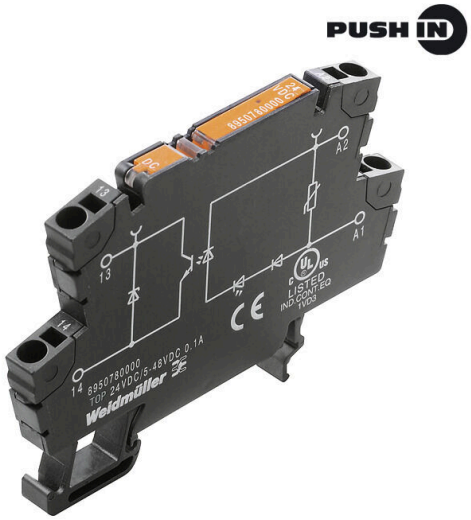

Similar to illustration

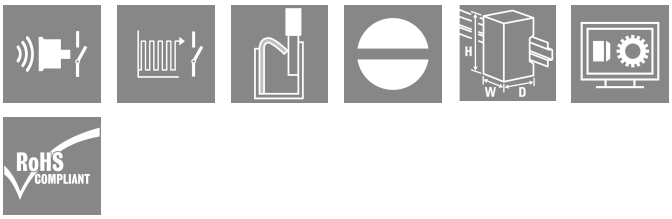

- 1 NO contact (Transistor)
- Ensures wear- and maintenance-free potential separation in compact terminal block format
- Suitable accessories from the cross-connection to the marker
- Integrated protective circuit for inputs and outputs

General ordering data

Version	TERMOPTO, Solid-state relay, Rated control voltage: 5 V DC ±20 % , Rated switching voltage: 5...48 V DC, Continuous current: 0.1 A, PUSH IN
Order No.	8950760000
Type	TOP 5VDC/48VDC 0,1A
GTIN (EAN)	4032248742134
Qty.	10 items

TOP 5VDC/48VDC 0,1A

Weidmüller Interface GmbH & Co. KG
Klingenbergstraße 26
D-32758 Detmold
Germany

www.weidmueller.com

Technical data

Approvals

Approvals	
ROHS	Conform
UL File Number Search	UL Website
Certificate no. (cULus)	E223474

Dimensions and weights

Depth	55 mm	Depth (inches)	2.1654 inch
Height	79.4 mm	Height (inches)	3.126 inch
Width	6.1 mm	Width (inches)	0.2402 inch
Net weight	19.3 g		

Temperatures

Storage temperature	-40 °C...80 °C	Ambient temperature	-20 °C...60 °C
Operating temperature		Humidity	5-95% relative humidity, Tu = 40°C, without condensation

Probability of failure

MTTF	2500 a

Environmental Product Compliance

RoHS Compliance Status	Compliant with exemption
RoHS Exemption (if applicable/known)	7a, 7cI
REACH SVHC	Lead 7439-92-1
SCIP	9e2cbc49-76d9-4611-b8ec-5b4f549a0aa9

Control side

Rated control voltage	5 V DC ±20 %	Rated control voltage (control input)	5 V DC ±20 %
Nominal control current	7.7 mA DC	Power rating	<40 mW
Status indicator	Green LED	Protective circuit	Varistor, Reverse polarity protection
Input frequency	3 kHz		

Load side

Rated switching voltage	5...48 V DC	Continuous current	0.1 A (DC1)
Rated switching current	100 mA	Load category	DC1
Max. switching voltage, DC	48 V	Switch-on delay	<13 µs
Switch-off delay	<42 µs	Voltage drop at max. load	<1 V
Leakage current	<10 µA	Min. switching current	100 µA
Short-circuit-proof	No	Protective circuit, load side	Free-wheeling diode
Contact type	1 NO contact (Transistor)	max. switching frequency (DC control voltage)	3000 Hz

General data

Mounting rail	TS 35

TOP 5VDC/48VDC 0,1A

Weidmüller Interface GmbH & Co. KG
Klingenbergstraße 26
D-32758 Detmold
Germany

www.weidmueller.com

Technical data

Test button available	No	
Colour	black	
UL94 flammability rating component	Component	Housing
	UL94 flammability rating	V-0

Insulation coordination

Rated voltage	300 V	Pollution severity	2
Surge voltage category	III	Clearance and creepage distances for control side - load side	> 3 mm
Dielectric strength for control side - load side	1.2 kVeff / 1 min.	Impulse withstand voltage	4 kV (1.2/50 µs)
Protection degree	IP20		

Further details of approvals / standards

Certificate no. (cULus)	E223474

Connection data

Wire connection method	PUSH IN	Stripping length, rated connection	10 mm
Clamping range, rated connection	1.5 mm²	Clamping range, min.	0.5 mm²
Clamping range, max.	2.5 mm²	Wire connection cross section AWG, min.	AWG 20
Wire connection cross section AWG, max.	AWG 14	Wire cross-section, solid, min.	0.5 mm²
Wire cross-section, solid, max.	1.5 mm²	Wire connection cross section, finely stranded, min.	0.5 mm²
Wire connection cross section, finely stranded, max.	1.5 mm²	Wire cross-section, finely stranded, min. (AWG)	AWG 20
Wire cross-section, finely stranded, max. (AWG)	AWG 14	Wire connection cross-section, finely stranded with wire-end ferrules DIN 46228/4, min.	0.5 mm²
Wire connection cross-section, finely stranded with wire-end ferrules DIN 46228/4, max.	1.5 mm²	Conductor cross-section, flexible, AEH (DIN 46228-1), min.	0.5 mm²
Conductor cross-section, flexible, AEH (DIN 46228-1), max.	1.5 mm²	Blade size	0.6 x 3.5 mm

Classifications

ETIM 8.0	EC001504	ETIM 9.0	EC001504
ETIM 10.0	EC001504	ECLASS 14.0	27-37-16-04
ECLASS 15.0	27-37-16-04		

TOP 5VDC/48VDC 0,1A

Weidmüller Interface GmbH & Co. KG
Klingenbergstraße 26
D-32758 Detmold
Germany

www.weidmueller.com

Drawings

Wiring diagram

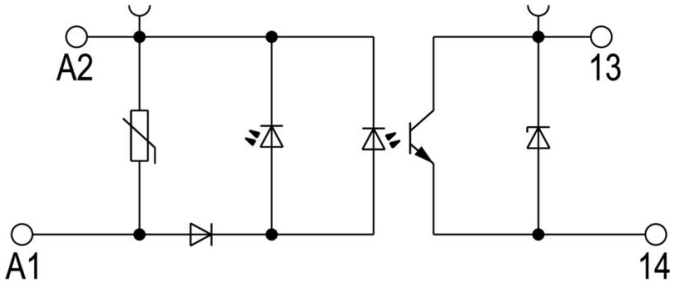

Schaltsymbol

Dimensional drawing

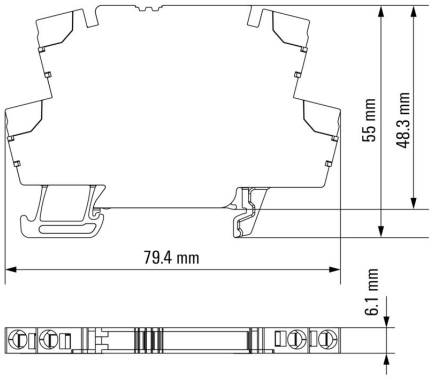

Correct handling PUSH IN connection

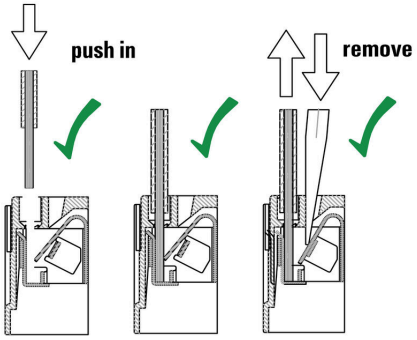

Wrong handling PUSH IN connection

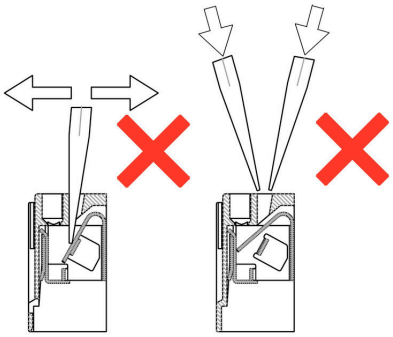

Recommended screwdriver

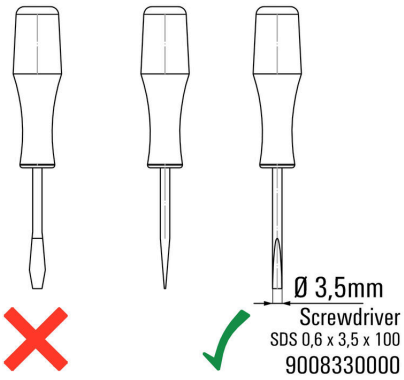

Weidmüller Interface GmbH & Co. KG
Klingenbergstraße 26
D-32758 Detmold
Germany

www.weidmueller.com

Drawings

Miscellaneous

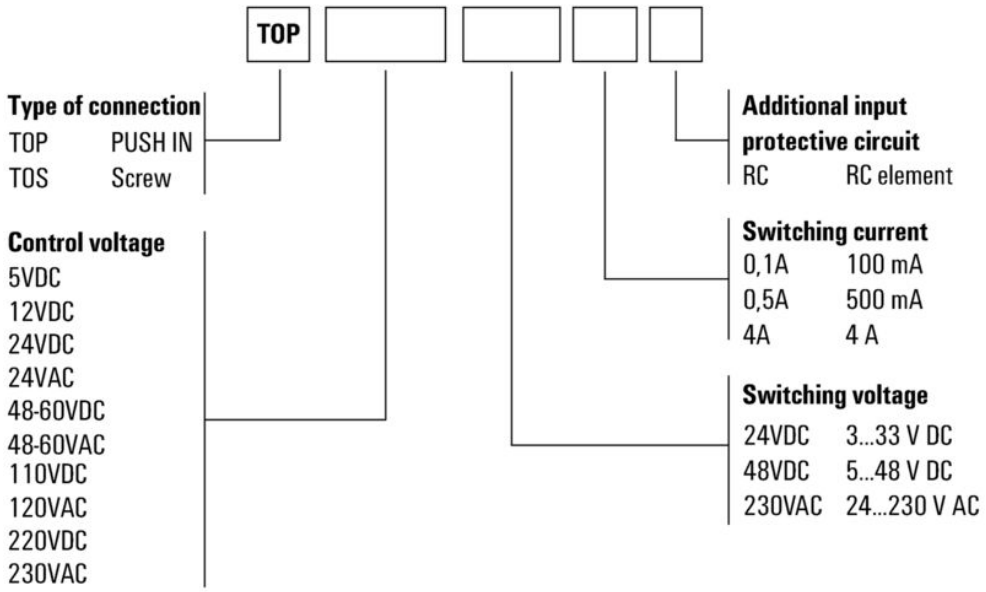

Type codes

TOP 5VDC/48VDC 0,1A

Weidmüller Interface GmbH & Co. KG
Klingenbergstraße 26
D-32758 Detmold
Germany

www.weidmueller.com

Accessories

Cross-connections

The distribution or multiplication of a potential to adjoining terminal blocks is realized via a cross-connection. Additional wiring effort can be easily avoided. Even if the poles are broken out, contact reliability in the terminal blocks is still ensured. Our portfolio offers pluggable and screwable cross-connection systems for modular terminal blocks.

General ordering data

Type	ZQV 4N/20 GE	Version
Order No.	1909020000	W-Series, Cross-connector, 32 A
GTIN (EAN)	4032248535644	
Qty.	20 ST	
Type	ZQV 4N/20 RT	Version
Order No.	1909150000	W-Series, Cross-connector, 32 A
GTIN (EAN)	4032248535934	
Qty.	20 ST	
Type	ZQV 4N/20 BL	Version
Order No.	1909100000	W-Series, Cross-connector, 32 A
GTIN (EAN)	4032248535774	
Qty.	20 ST	
Type	ZQV 4N/2 SW	Version
Order No.	1793970000	W-Series, Cross-connector, 32 A
GTIN (EAN)	4032248233762	
Qty.	60 ST	
Type	ZQV 4N/3 SW	Version
Order No.	1794000000	W-Series, Cross-connector, 32 A
GTIN (EAN)	4032248233793	
Qty.	60 ST	
Type	ZQV 4N/4 SW	Version
Order No.	1794030000	W-Series, Cross-connector, 32 A
GTIN (EAN)	4032248233915	
Qty.	60 ST	
Type	ZQV 4N/10 SW	Version
Order No.	1794060000	W-Series, Cross-connector, 32 A
GTIN (EAN)	4032248234059	
Qty.	20 ST	
Type	ZQV 4N/20 SW	Version
Order No.	1909120000	W-Series, Cross-connector, 32 A
GTIN (EAN)	4032248535804	
Qty.	20 ST	

Weidmüller Interface GmbH & Co. KG
Klingenbergstraße 26
D-32758 Detmold
Germany

www.weidmueller.com

Accessories

Slotted screwdriver

Slotted screwdriver with rounded blade SD DIN 5265, ISO 2380/2, output to DIN 5264, ISO 2380/1. ChromTop tip, SoftFinish grip

General ordering data

Type	SDS 0.6X3.5X100	Version
Order No.	2749340000	Screwdriver, Blade width (B): 3.5 mm, Blade length: 100 mm, Blade
GTIN (EAN)	4050118895568	thickness (A): 0.6 mm
Qty.	1 ST	
Type	SDIS SLIM 0.6X3.5X100	Version
Order No.	2749610000	Mounting tool, Blade width (B): 3.5 mm, Blade length: 100 mm, Blade
GTIN (EAN)	4050118896350	thickness (A): 0.6 mm
Qty.	1 ST	

Blank

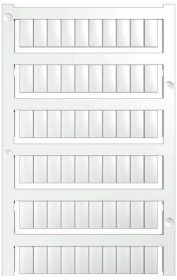

WS markers are the perfect match for the W-series connectors. Thanks to their system compatibility, the WS tags can also be used with the I-series and the Z-series. The large marking surfaces do not only permit long character strings but also multi-line text.
WS markers are ideal for labels with long, customised character strings. Thanks to the proven MultiCard format, printing with PrintJet CONNECT oder/or Plotter is possible.
• Can be fitted in strips or individually
• Markers in proven MultiCard format
For custom printing: Please send us a file of our labeling software M-Print PRO or M-Print PRO Online (without installation) for your labeling specifications.

General ordering data

Type	WS 12/6 MC NE WS	Version
Order No.	1609900000	WS, Terminal marker, 12 x 6 mm, Pitch in mm (P): 6.00 Weidmueller,
GTIN (EAN)	4008190203467	Allen-Bradley, white
Qty.	600 ST	

TOP 5VDC/48VDC 0,1A

Weidmüller Interface GmbH & Co. KG
Klingenbergstraße 26
D-32758 Detmold
Germany

www.weidmueller.com

Accessories

Cross-connections

The distribution or multiplication of a potential to adjoining terminal blocks is realized via a cross-connection. Additional wiring effort can be easily avoided. Even if the poles are broken out, contact reliability in the terminal blocks is still ensured. Our portfolio offers pluggable and screwable cross-connection systems for modular terminal blocks.

General ordering data

Type	ZQV 4N/2	Version
Order No.	1527930000	Cross-connector (terminal), Plugged, orange, 32 A, Number of poles:
GTIN (EAN)	4050118332766	2, Pitch in mm (P): 6.10, Insulated: Yes, Width: 9.9 mm
Qty.	60 ST	
Type	ZQV 4N/3	Version
Order No.	1527940000	Cross-connector (terminal), Plugged, orange, 32 A, Number of poles:
GTIN (EAN)	4050118332865	3, Pitch in mm (P): 6.10, Insulated: Yes, Width: 16 mm
Qty.	60 ST	
Type	ZQV 4N/4	Version
Order No.	1527970000	Cross-connector (terminal), Plugged, orange, 32 A, Number of poles:
GTIN (EAN)	4050118332889	4, Pitch in mm (P): 6.10, Insulated: Yes, Width: 22.1 mm
Qty.	60 ST	
Type	ZQV 4N/10	Version
Order No.	1528090000	Cross-connector (terminal), Plugged, orange, 32 A, Number of poles:
GTIN (EAN)	4050118332896	10, Pitch in mm (P): 6.10, Insulated: Yes, Width: 58.7 mm
Qty.	20 ST	
Type	ZQV 4N/2 RD	Version
Order No.	2460450000	Cross-connector (terminal), Plugged, red, 32 A, Number of poles: 2,
GTIN (EAN)	4050118476149	Pitch in mm (P): 6.10, Insulated: Yes, Width: 9.9 mm
Qty.	60 ST	
Type	ZQV 4N/3 RD	Version
Order No.	2460810000	Cross-connector (terminal), Plugged, red, 32 A, Number of poles: 3,
GTIN (EAN)	4050118476231	Pitch in mm (P): 6.10, Insulated: Yes, Width: 16 mm
Qty.	60 ST	
Type	ZQV 4N/4 RD	Version
Order No.	2460800000	Cross-connector (terminal), Plugged, red, 32 A, Number of poles: 4,
GTIN (EAN)	4050118476224	Pitch in mm (P): 6.10, Insulated: Yes, Width: 22.1 mm
Qty.	60 ST	
Type	ZQV 4N/10 RD	Version
Order No.	2460740000	Cross-connector (terminal), Plugged, red, 32 A, Number of poles: 10,
GTIN (EAN)	4050118476163	Pitch in mm (P): 6.10, Insulated: Yes, Width: 58.7 mm
Qty.	20 ST	
Type	ZQV 4N/2 BL	Version
Order No.	1528040000	Cross-connector (terminal), Plugged, blue, 32 A, Number of poles: 2,
GTIN (EAN)	4050118332773	Pitch in mm (P): 6.10, Insulated: Yes, Width: 9.9 mm
Qty.	60 ST	
Type	ZQV 4N/3 BL	Version
Order No.	1528080000	Cross-connector (terminal), Plugged, blue, 32 A, Number of poles: 3,
GTIN (EAN)	4050118333008	Pitch in mm (P): 6.10, Insulated: Yes, Width: 16 mm
Qty.	60 ST	

TOP 5VDC/48VDC 0,1A

Weidmüller Interface GmbH & Co. KG
Klingenbergstraße 26
D-32758 Detmold
Germany

www.weidmueller.com

Accessories

Type	ZQV 4N/4 BL	Version
Order No.	1528120000	Cross-connector (terminal), Plugged, blue, 32 A, Number of poles: 4,
GTIN (EAN)	4050118332872	Pitch in mm (P): 6.10, Insulated: Yes, Width: 22.1 mm
Qty.	60 ST	
Type	ZQV 4N/10 BL	Version
Order No.	1528230000	Cross-connector (terminal), Plugged, blue, 32 A, Number of poles: 10,
GTIN (EAN)	4050118333138	Pitch in mm (P): 6.10, Insulated: Yes, Width: 58.7 mm
Qty.	20 ST	