Data sheet

RCMKITP-I 115VAC 4CO LD

Weidmüller Interface GmbH & Co. KG
Klingenbergstraße 26
D-32758 Detmold
Germany

www.weidmueller.com

Product image

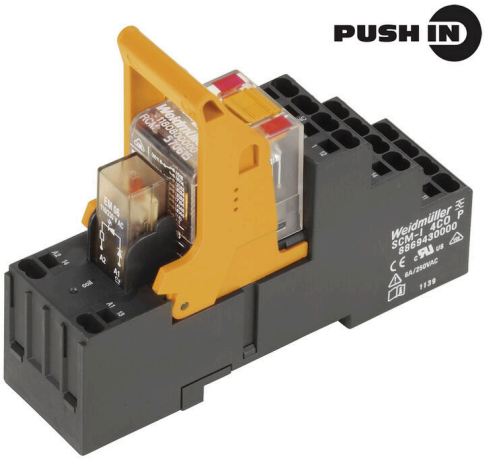

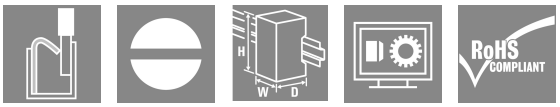

- Mounted kit consisting relay, socket and retaining clip
- 100 % function tested
- 100 % check of the dielectric strenght between input - output
- 4 CO contacts
- Test button with mechanical status indicator
- Bright status LED (AC coil: red / DC coil: green)
- Identification of coils (AC red / DC blue)

General ordering data

Version	RIDERSERIES RCM, Relay module, Number of contacts: 4, CO contact AgNi, Rated control voltage: 115 V AC, Continuous current: 6 A, PUSH IN, Test button available: Yes
Order No.	8921140000
Type	RCMKITP-I 115VAC 4CO LD
GTIN (EAN)	4032248692354
Qty.	10 items
Delivery status	This article will no longer be available in the future.
Available until	2025-12-31T00:00:00+01:00

RCMKITP-I 115VAC 4CO LD

Weidmüller Interface GmbH & Co. KG
Klingenbergstraße 26
D-32758 Detmold
Germany

www.weidmueller.com

Technical data

Approvals

Approvals	
ROHS	Conform

Dimensions and weights

Depth	78.3 mm	Depth (inches)	3.0827 inch
Height	98 mm	Height (inches)	3.8583 inch
Width	28 mm	Width (inches)	1.1024 inch
Net weight	107.5 g		

Temperatures

Storage temperature	-40 °C...70 °C	Ambient temperature	-40 °C...70 °C
Operating temperature		Humidity	40 °C / 93 % rel. humidity, no condensation

Environmental Product Compliance

RoHS Compliance Status	Compliant without exemption
REACH SVHC	No SVHC above 0.1 wt%

Control side

Rated control voltage	115 V AC	Rated current AC	10.5 mA
Power rating	1.36 VA	Coil resistance	4845 Ω ± 12 %
Status indicator	red LED		

Load side

Rated switching voltage	240 V AC	Continuous current	6 A
Max. switching frequency at rated load	0.1 Hz	Max. switching voltage, AC	250 V
Inrush current	12 A / 20 ms	AC switching capacity (resistive), max.	1500 VA
DC switching capacity (resistive), max.	144 W @ 24 V	Switch-on delay	≤ 15 ms
Switch-off delay	≤ 10 ms	Contact type	4 CO contact (AgNi)
Mechanical service life	AC coil 20 x 106 switching cycles, DC coil 30 x 106 switching cycles	Min. switching power	1 mA @ 24 V, 10 mA @ 12 V, 100 mA @ 5 V

General data

Mounting rail	TS 35	Test button available	Yes
Version of test button	Lockable test button, Momentary test button	Mechanical switch position indicator	Yes
Colour	black		

Insulation coordination

Rated voltage	250 V	Pollution severity	2
Surge voltage category	III	Insulating material group	IIIa
Clearance and creepage distances for control side - load side	≥ 4 mm	Dielectric strength for control side - load side	2.5 kVeff / 1 Min.
Dielectric strength of neighbouring contacts	2 kVeff / 1 min	Dielectric strength of open contact	1.2 kVeff /1 min.

RCMKITP-I 115VAC 4CO LD

Weidmüller Interface GmbH & Co. KG
Klingenbergstraße 26
D-32758 Detmold
Germany

www.weidmueller.com

Technical data

Impulse withstand voltage	5 kV (1.2/50 µs)	Protection degree	IP20

Further details of approvals / standards

Relevant rim module	RIM-I 3 110/230VUC	Relevant relay	RCM570615
Relevant base	SCM-I 4CO P	Certificate no. (CSA) relay	249409-2426937
Certificate no. (CSA) base	249409-2295474	Certificate No. (DNV)	TAA000011A
Certificate no. (cURus) relay	E522350	Certificate no. (cURus) base	E223759

Connection data

Wire connection method	PUSH IN	Stripping length, rated connection	12 mm
Clamping range, rated connection	1.5 mm²	Clamping range, min.	0.75 mm²
Clamping range, max.	1.5 mm²	Wire cross-section, solid, min.	0.75 mm²
Wire cross-section, solid, max.	1.5 mm²	Wire cross-section, solid, max. (AWG)	AWG 16
Wire connection cross section, finely stranded, min.	0.75 mm²	Wire connection cross section, finely stranded, max.	1.5 mm²
Wire cross-section, finely stranded, max. (AWG)	AWG 16	Wire connection cross-section, finely stranded with wire-end ferrules DIN 46228/4, min.	0.75 mm²
Wire connection cross-section, finely stranded with wire-end ferrules DIN 46228/4, max.	0.75 mm²	Conductor cross-section, flexible, AEH (DIN 46228-1), min.	0.75 mm²
Conductor cross-section, flexible, AEH (DIN 46228-1), max.	1 mm²	Blade size	0.6 x 3.5 mm

Classifications

ETIM 8.0	EC001437	ETIM 9.0	EC001437
ETIM 10.0	EC001437	ECLASS 14.0	27-37-16-01
ECLASS 15.0	27-37-16-01		

RCMKITP-I 115VAC 4CO LD

Weidmüller Interface GmbH & Co. KG
Klingenbergstraße 26
D-32758 Detmold
Germany

www.weidmueller.com

Drawings

Wiring diagram

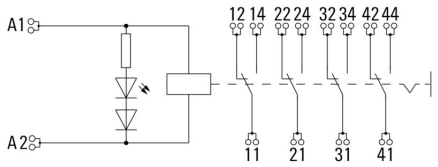

Graph

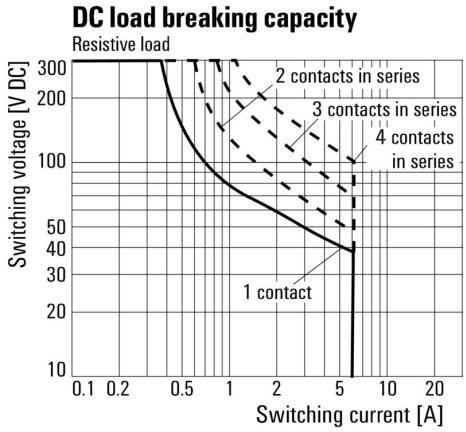

DC load limit curve Resistive load

Graph

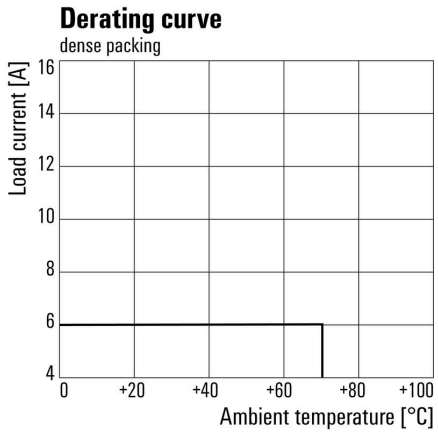

Derating curve Relay in combination with base

Graph

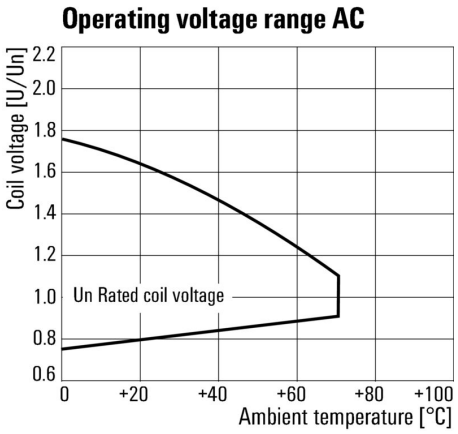

AC operational voltage range

RCMKITP-I 115VAC 4CO LD

Weidmüller Interface GmbH & Co. KG
Klingenbergstraße 26
D-32758 Detmold
Germany

www.weidmueller.com

Drawings

Graph

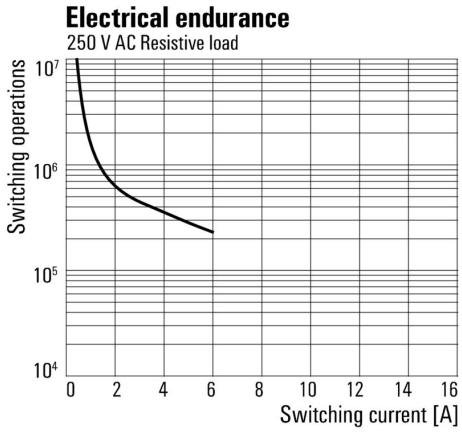

Electrical service life250 V AC resistive load 250 V AC resistive load

Dimensional drawing

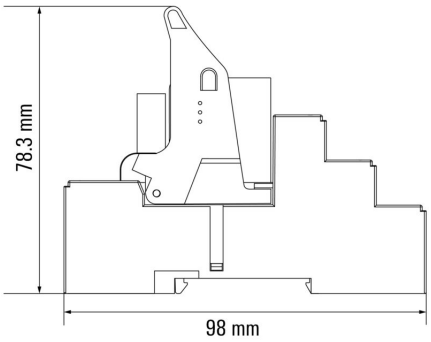

Correct handling PUSH IN connection

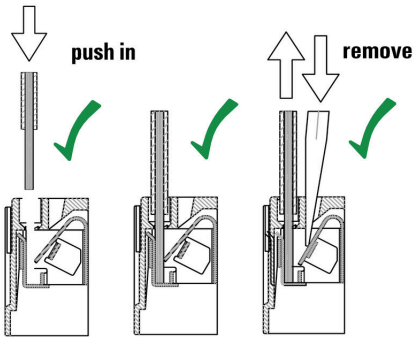

Wrong handling PUSH IN connection

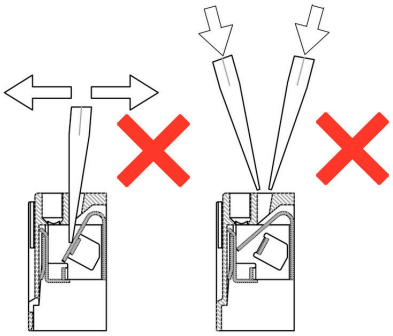

Weidmüller Interface GmbH & Co. KG
Klingenbergstraße 26
D-32758 Detmold
Germany

www.weidmueller.com

Drawings

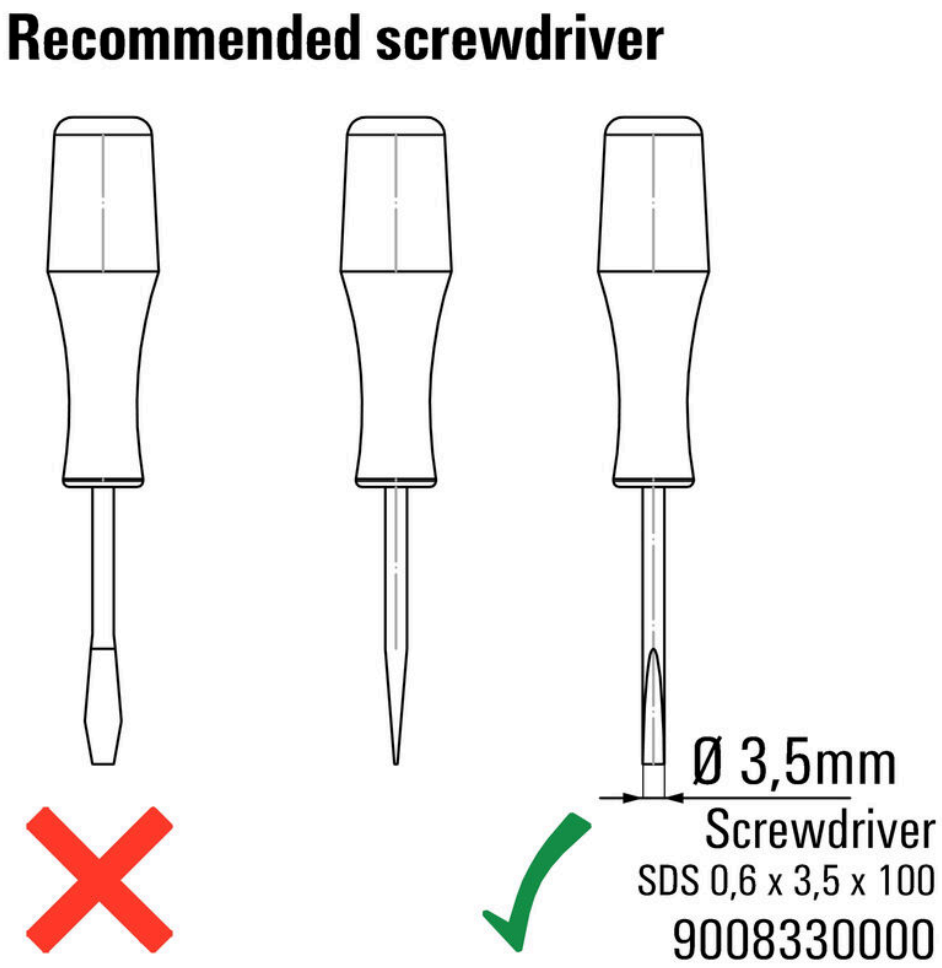

RCMKITP-I 115VAC 4CO LD

Weidmüller Interface GmbH & Co. KG
Klingenbergstraße 26
D-32758 Detmold
Germany

www.weidmueller.com

Drawings

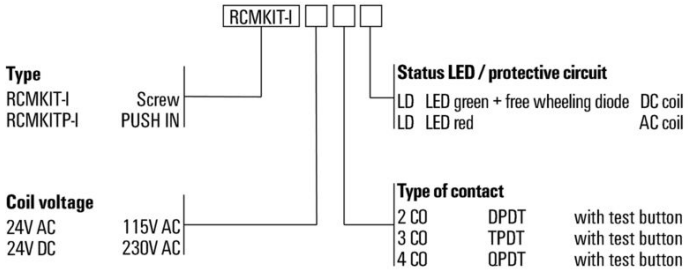

RCMKITP-I 115VAC 4CO LD

Weidmüller Interface GmbH & Co. KG
Klingenbergstraße 26
D-32758 Detmold
Germany

www.weidmueller.com

Accessories

Cross-connection for socket with PUSH IN connection

Cross-connection for the socktes in the RIDERSERIES RCM

General ordering data

Type	SCM-I QV P	Version
Order No.	8870850000	RIDERSERIES RCM, Cross-connector
GTIN (EAN)	4032248631698	
Qty.	10 ST	

Protection module

Pluggable protective modules for the RIDERSERIES RCI / RCM relay sockets, with optional protective functions.
- Optional with free-wheeling diode, protective varistor, load resistor or RC filter

General ordering data

Type	RIM-I 1 6/230V	Version
Order No.	8869580000	RIDERSERIES, Free-wheeling diode, Rated control voltage: 6...230 V
GTIN (EAN)	4032248614523	DC, Plug-in connection
Qty.	10 ST	
Type	RIM-I 1 R 110/230V	Version
Order No.	8870830000	RIDERSERIES, Load, Rated control voltage: 110...230 V UC, Plug-in
GTIN (EAN)	4032248631674	connection
Qty.	10 ST	

LED

Pluggable protective modules for the RIDERSERIES RCI / RCM relay sockets, with optional protective functions.
- Optional with green or red LED
- For UC supply voltage

RCMKITP-I 115VAC 4CO LD

Weidmüller Interface GmbH & Co. KG
Klingenbergstraße 26
D-32758 Detmold
Germany

www.weidmueller.com

Accessories

General ordering data

Type	RIM-I 3 110/230VUC	Version
Order No.	8869650000	RIDERSERIES, LED module, Rated control voltage: 110...230 V UC,
GTIN (EAN)	4032248614592	Plug-in connection
Qty.	10 ST	
Type	RIM-I 3 110/230VUC GN	Version
Order No.	8869660000	RIDERSERIES, LED module, Rated control voltage: 110...230 V UC,
GTIN (EAN)	4032248614721	Plug-in connection
Qty.	10 ST	

Protection module

Pluggable protective modules for the RIDERSERIES RCI / RCM relay sockets, with optional protective functions.
- Optional with free-wheeling diode, protective varistor, load resistor or RC filter

General ordering data

Type	RIM-I 3 110/230VAC RC	Version
Order No.	8869790000	RIDERSERIES, RC filter, Rated control voltage: 110...230 V UC, Plug-in
GTIN (EAN)	4032248606337	connection
Qty.	10 ST	

Protective varistor

Pluggable protective modules for the RIDERSERIES RCI / RCM relay sockets, with optional protective functions.
- With protective varistor
- For UC supply voltage

General ordering data

Type	RIM-I 4 110VUC VAR	Version
Order No.	8869730000	RIDERSERIES, Protective varistor, Rated control voltage: 110 V UC,
GTIN (EAN)	4032248606351	Plug-in connection
Qty.	10 ST	

RCMKITP-I 115VAC 4CO LD

Weidmüller Interface GmbH & Co. KG
Klingenbergstraße 26
D-32758 Detmold
Germany

www.weidmueller.com

Accessories

Retaining clips

Retaining clip for RIDERSERIES RCM relays
- Metal and plastic retaining clip

General ordering data

Type	SCM-I CLIP M	Version
Order No.	8869450000	RIDERSERIES RCM, Retaining clip
GTIN (EAN)	4032248614301	
Qty.	10 ST	
Type	SCM-I CLIP P	Version
Order No.	8869440000	RIDERSERIES RCM, Retaining clip
GTIN (EAN)	4032248614295	
Qty.	10 ST	

Blank

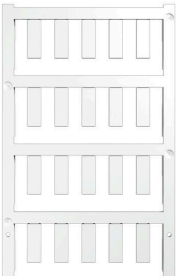

ESG is the tried-and-tested marker in MultiCard format for use on many well-known electrical devices. The result is high-quality device marking with a high-contrast appearance.
Various types are available for devices from manufacturers like Siemens, ABB, Beckhoff etc.
Advantages at a glance:
- Tags for universal usage, self-adhesive or clip-on tags, depending on type
- For aligned equipment, e.g. circuit breakers, we supply ESG markers for clipping onto tag rails
- Individual laser-quality printing according to specifications

For custom printing: Please send us a file of our labeling software M-Print PRO or M-Print PRO Online (without installation) for your labeling specifications.

General ordering data

Type	ESG 6/17 K MC NE WS	Version
Order No.	1880120000	ESG, Device markers x 17 mm, PA 66, Colour: white, Self-adhesive
GTIN (EAN)	4032248478804	
Qty.	200 ST	
Type	ESG 6/17 K MC NE GE	Version
Order No.	1880110000	ESG, Device markers x 17 mm, PA 66, Colour: yellow, Self-adhesive
GTIN (EAN)	4032248478798	
Qty.	200 ST	
Type	ESG 6/15 K MC NE GE	Version
Order No.	1880130000	ESG, Device markers x 15 mm, PA 66, Colour: yellow, Self-adhesive
GTIN (EAN)	4032248478910	
Qty.	200 ST	

RCMKITP-I 115VAC 4CO LD

Weidmüller Interface GmbH & Co. KG
Klingenbergstraße 26
D-32758 Detmold
Germany

www.weidmueller.com

Accessories

Type	ESG 6/15 K MC NE WS	Version
Order No.	1880100000	ESG, Device markers x 15 mm, PA 66, Colour: white, Self-adhesive
GTIN (EAN)	4032248478781	
Qty.	200 ST	

Slotted screwdriver

VDE insulated screwdriver sets, for working on live parts up to 1000 V AC and 1500 V DC, DIN EN 60900. IEC 900. Each piece is "GS" safety tested. Blade made from fully hardened, high-alloy chromium-vanadium-molybdenum steel, gun-metal finish.

General ordering data

Type	SDIS SLIM 0.6X3.5X100	Version
Order No.	2749610000	Mounting tool, Blade width (B): 3.5 mm, Blade length: 100 mm, Blade
GTIN (EAN)	4050118896350	thickness (A): 0.6 mm
Qty.	1 ST	
Type	SDIS 0.6X3.5X100	Version
Order No.	2749810000	Screwdriver, Blade width (B): 3.5 mm, Blade length: 100 mm, Blade
GTIN (EAN)	4050118897012	thickness (A): 0.6 mm
Qty.	1 ST	
Type	SDS 0.6X3.5X100	Version
Order No.	2749340000	Screwdriver, Blade width (B): 3.5 mm, Blade length: 100 mm, Blade
GTIN (EAN)	4050118895568	thickness (A): 0.6 mm
Qty.	1 ST	

ESG 6/15

Guaranteed long service life: ESG
The multi-colour and multi-format labels have a strong adhesive layer to ensure the best possible adhesion to the underlying surface. Double laminated polyester makes the basic material very thin and yet extremely tear-resistant.
Your benefits with MultiMark
- “Different materials for various requirements”
- Can be used with equipment from many manufacturers
- Device markers with a familiar design

General ordering data

Type	ESG 6/15 MM WS	Version
Order No.	2619940000	ESG, Device markers, 6 x 15 mm, white
GTIN (EAN)	4050118626148	
Qty.	3000 ST	

RCMKITP-I 115VAC 4CO LD

Weidmüller Interface GmbH & Co. KG
Klingenbergstraße 26
D-32758 Detmold
Germany

www.weidmueller.com

Accessories

ESG 6/17

Guaranteed long service life: ESG
The multi-colour and multi-format labels have a strong adhesive layer to ensure the best possible adhesion to the underlying surface. Double laminated polyester makes the basic material very thin and yet extremely tear-resistant.
Your benefits with MultiMark
- “Different materials for various requirements”
- Can be used with equipment from many manufacturers
- Device markers with a familiar design

General ordering data

Type	ESG 6/17 MM WS	Version
Order No.	2005100000	ESG, Device markers, 6 x 17 mm, white
GTIN (EAN)	4050118390728	
Qty.	3000 ST	

Blank

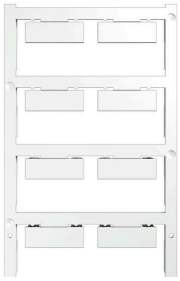

ESG is the tried-and-tested marker in MultiCard format for use on many well-known electrical devices. The result is high-quality device marking with a high-contrast appearance.
Various types are available for devices from manufacturers like Siemens, ABB, Beckhoff etc.
Advantages at a glance:
- Tags for universal usage, self-adhesive or clip-on tags, depending on type
- For aligned equipment, e.g. circuit breakers, we supply ESG markers for clipping onto tag rails
- Individual laser-quality printing according to specifications

For custom printing: Please send us a file of our labeling software M-Print PRO or M-Print PRO Online (without installation) for your labeling specifications.

General ordering data

Type	ESG 9/26 SCM-I MC NE WS	Version
Order No.	2558330000	ESG, Device markers x 26 mm, PA 66, Colour: white, pluggable
GTIN (EAN)	4050118569049	
Qty.	80 ST	