Data sheet

RCIKITP 24VAC 1CO LD/PB

Weidmüller Interface GmbH & Co. KG
Klingenbergstraße 26
D-32758 Detmold
Germany

www.weidmueller.com

Product image

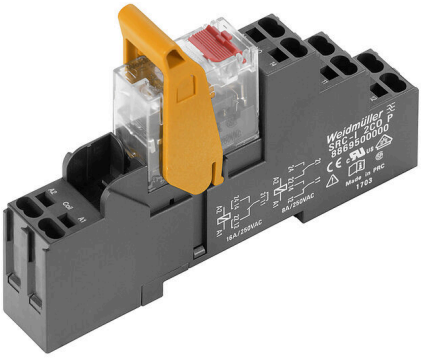

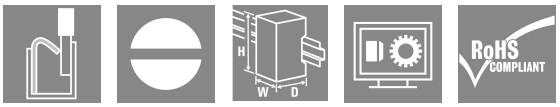

Similar to illustration

- Mounted kit consisting relay, socket and retaining clip
- 100 % function tested
- 100 % check of the dielectric strenght between input - output
- 1 CO contacts
- Optional test button with mechanical status indicator
- Bright status LED (AC coil: red / DC coil: green)
- identification of coils (AC red / DC blue)

General ordering data

Version	RIDERSERIES RCI, Relay module, Number of contacts: 1, CO contact AgNi, Rated control voltage: 24 V AC, Continuous current: 16 A, PUSH IN, Test button available: Yes
Order No.	8897200000
Type	RCIKITP 24VAC 1CO LD/PB
GTIN (EAN)	4032248646975
Qty.	10 items
Delivery status	This article will no longer be available in the future.
Available until	2024-10-31T00:00:00+01:00
Alternative product	CRIKIT P 24VAC 1CO L/PB

RCIKITP 24VAC 1CO LD/PB

Weidmüller Interface GmbH & Co. KG
Klingenbergstraße 26
D-32758 Detmold
Germany

www.weidmueller.com

Technical data

Approvals

Approvals	
ROHS	Conform

Dimensions and weights

Depth	69.6 mm	Depth (inches)	2.7402 inch
Height	98 mm	Height (inches)	3.8583 inch
Width	15.8 mm	Width (inches)	0.622 inch
Net weight	50.25 g		

Temperatures

Storage temperature	-40 °C...70 °C	Ambient temperature	-40 °C...70 °C
Operating temperature		Humidity	40 °C / 93 % rel. humidity, no condensation

Environmental Product Compliance

RoHS Compliance Status	Compliant without exemption
REACH SVHC	No SVHC above 0.1 wt%

Control side

Rated control voltage	24 V AC	Rated current AC	45 mA
Power rating	1080 mVA	Coil resistance	350 Ω ± 10 %
Status indicator	red LED		

Load side

Rated switching voltage	250 V AC	Continuous current	12 A @ 1CO without bridged output wire connections; 16 A @ 1CO with bridged output wire connections
Max. switching frequency at rated load	0.1 Hz	Max. switching voltage, AC	250 V
Inrush current	30 A / 4 s	AC switching capacity (resistive), max.	4000 VA
DC switching capacity (resistive), max.	384 W @ 24 V	Switch-on delay	≤ 8 ms
Switch-off delay	≤ 6 ms	Contact type	1 CO contact (AgNi)
Mechanical service life	AC coil 5 x 106 switching cycles, DC coil 10 x 106 switching cycles	Min. switching power	1 mA @ 24 V, 10 mA @ 12 V, 100 mA @ 5 V

General data

Mounting rail	TS 35	Test button available	Yes
Version of test button	lockable, just when removing the detend lock, Momentary test button	Mechanical switch position indicator	Yes
Colour	black		

RCIKITP 24VAC 1CO LD/PB

Weidmüller Interface GmbH & Co. KG
Klingenbergstraße 26
D-32758 Detmold
Germany

www.weidmueller.com

Technical data

Insulation coordination

Rated voltage	250 V	Pollution severity	2
Surge voltage category	III	Insulating material group	IIIa
Clearance and creepage distances for control side - load side	≥ 8 mm	Dielectric strength for control side - load side	5 kVeff / 1min
Dielectric strength of open contact	1 kVeff / 1 min	Impulse withstand voltage	5 kV (1.2/50 µs)
Protection degree	IP20		

Further details of approvals / standards

Relevant relay	RCI374R24	Relevant base	SRC-I 2CO P
Certificate no. (CSA) relay	249409-2426937	Certificate no. (CSA) base	249409-2295474
Certificate No. (DNV)	TAA000011A	Certificate no. (cURus) base	E223759

Connection data

Wire connection method	PUSH IN	Stripping length, rated connection	12 mm
Clamping range, rated connection	1.5 mm²	Clamping range, min.	0.75 mm²
Clamping range, max.	1.5 mm²	Wire cross-section, solid, min.	0.75 mm²
Wire cross-section, solid, max.	1.5 mm²	Wire connection cross section, finely stranded, min.	0.75 mm²
Wire connection cross section, finely stranded, max.	1.5 mm²	Wire connection cross-section, finely stranded with wire-end ferrules DIN 46228/4, min.	0.75 mm²
Wire connection cross-section, finely stranded with wire-end ferrules DIN 46228/4, max.	0.75 mm²	Conductor cross-section, flexible, AEH (DIN 46228-1), min.	0.75 mm²
Conductor cross-section, flexible, AEH (DIN 46228-1), max.	1 mm²	Blade size	0.6 x 3.5 mm

Classifications

ETIM 8.0	EC001437	ETIM 9.0	EC001437
ETIM 10.0	EC001437	ECLASS 14.0	27-37-16-01
ECLASS 15.0	27-37-16-01		

RCIKITP 24VAC 1CO LD/PB

Weidmüller Interface GmbH & Co. KG
Klingenbergstraße 26
D-32758 Detmold
Germany

www.weidmueller.com

Drawings

Wiring diagram

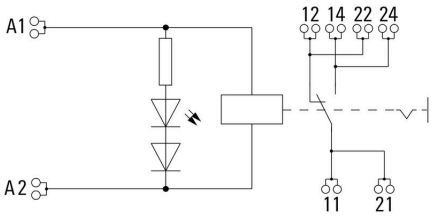

For full continuous current (16 A), the wire terminals 11 with 21, 12 with 22 and 14 with 24 must be bridged with a wire ≥ 1,5 mm² at the socket.

Graph

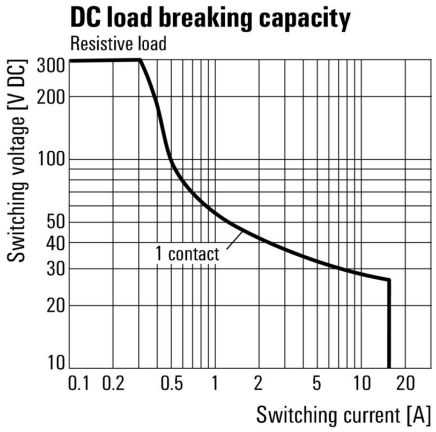

DC load limit curve Resistive load

Graph

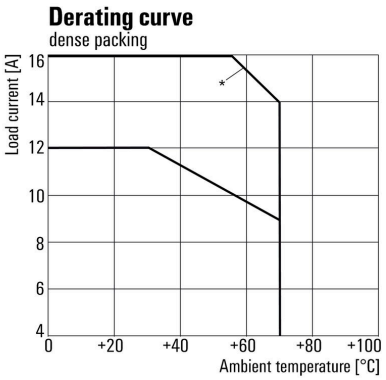

*For full continuous current (16 A), the wire terminals 11 with 21, 12 with 22 and 14 with 24 must be bridged with a wire ≥ 1,5 mm² at the socket.

Derating curve Relay in combination with base

Graph

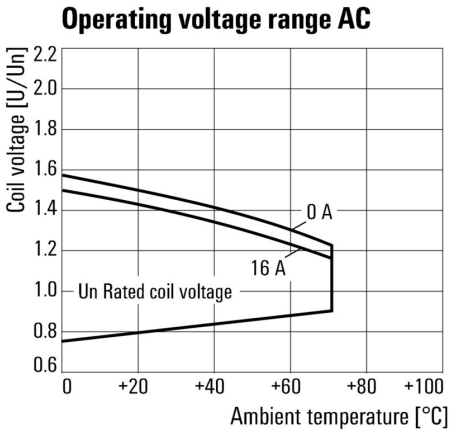

AC operational voltage range

RCIKITP 24VAC 1CO LD/PB

Weidmüller Interface GmbH & Co. KG
Klingenbergstraße 26
D-32758 Detmold
Germany

www.weidmueller.com

Drawings

Graph

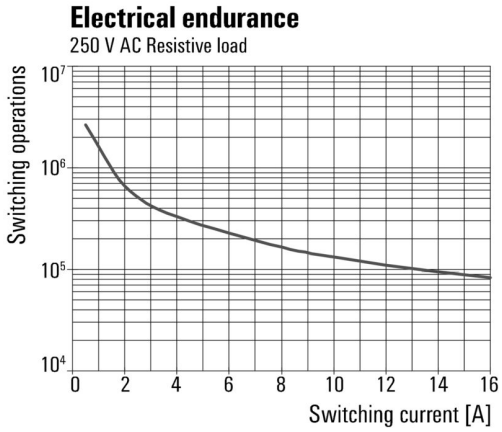

Electrical service life250 V AC resistive load 250 V AC resistive load

Dimensional drawing

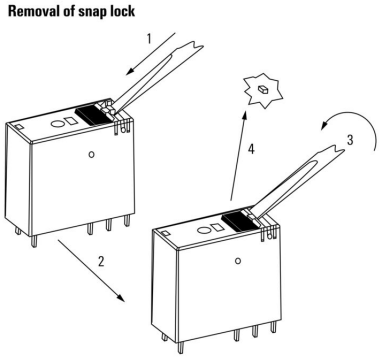

Detailed drawing Removal of the test button detent lock

Dimensional drawing

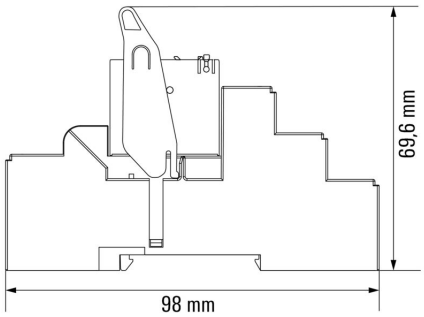

Correct handling PUSH IN connection

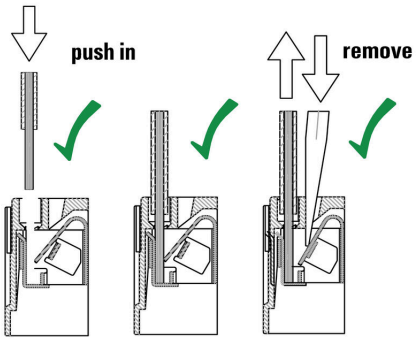

Weidmüller Interface GmbH & Co. KG
Klingenbergstraße 26
D-32758 Detmold
Germany

www.weidmueller.com

Drawings

Wrong handling PUSH IN connection

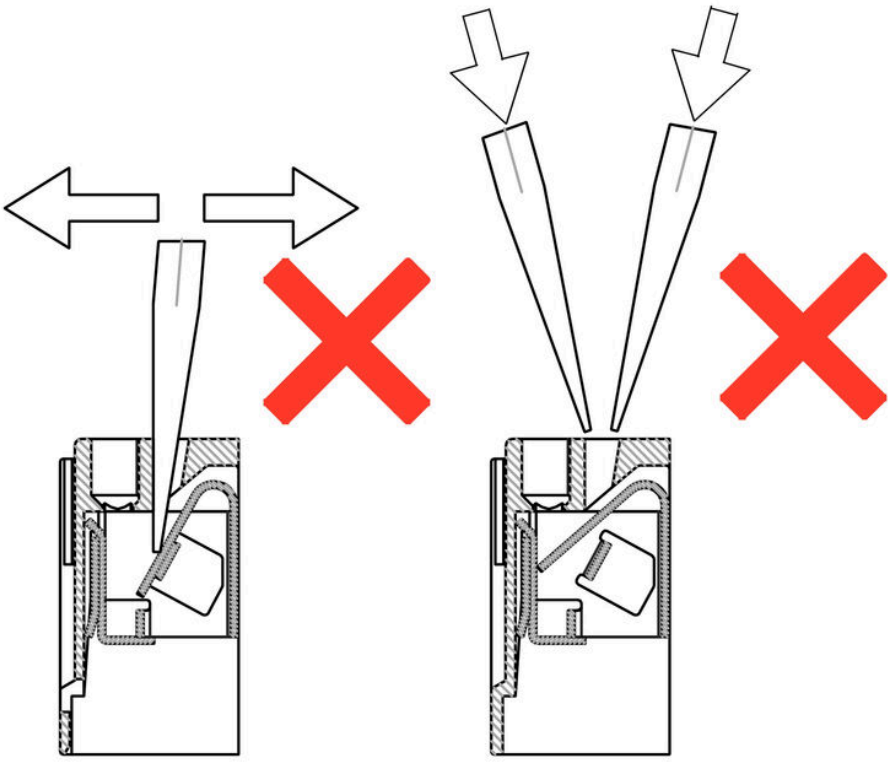

RCIKITP 24VAC 1CO LD/PB

Weidmüller Interface GmbH & Co. KG
Klingenbergstraße 26
D-32758 Detmold
Germany

www.weidmueller.com

Drawings

Recommended screwdriver

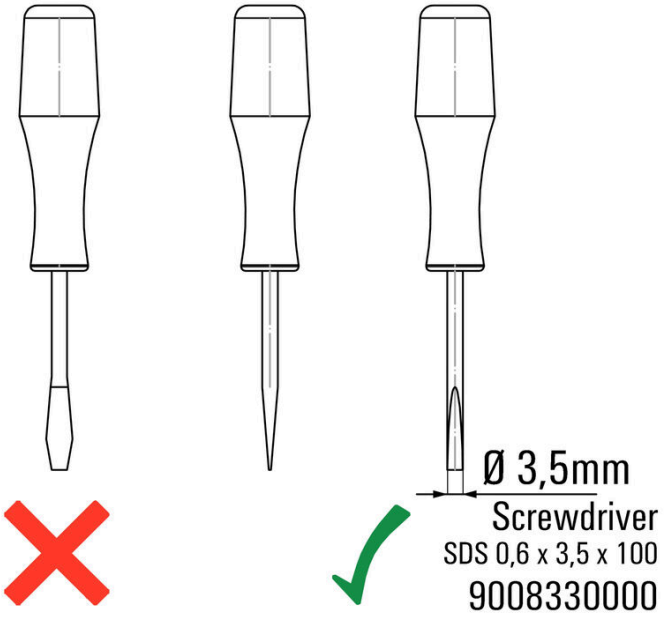

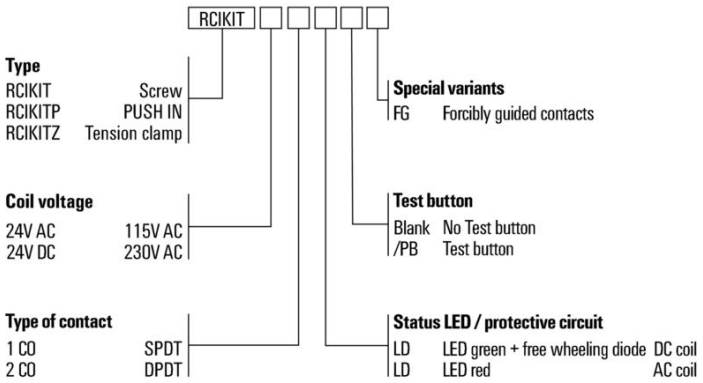

RCIKITP 24VAC 1CO LD/PB

Weidmüller Interface GmbH & Co. KG
Klingenbergstraße 26
D-32758 Detmold
Germany

www.weidmueller.com

Accessories

Cross-connection for socket with PUSH IN connection

Cross-connection for the socktes in the RIDERSERIES RCI.

General ordering data

Type	SRC-I QV P	Version
Order No.	8870840000	RIDERSERIES RCI, Cross-connector
GTIN (EAN)	4032248631681	
Qty.	10 ST	

Retaining clips

Retaining clip for RIDERSERIES RCI relays
• Metal and plastic retaining clip

General ordering data

Type	SRC-I CLIP HP	Version
Order No.	8869510000	RIDERSERIES RCI, Retaining clip
GTIN (EAN)	4032248614462	
Qty.	10 ST	

RCIKITP 24VAC 1CO LD/PB

Weidmüller Interface GmbH & Co. KG
Klingenbergstraße 26
D-32758 Detmold
Germany

www.weidmueller.com

Accessories

Individual components

Relay modules with forcibly guided contacts
Relays with forcibly guided contacts have a 99 % diagnostics coverage and an excellent reputation for use in safety systems. The contacts interlock mechanically with each other in order to ensure a synchronous switching status of both contacts. This guarantees that the alert contact will maintain the same switching status in the event of an error (for example, if the working contact welds from an overload). The controller (or safety controller) detects the alert contact and then compares the set values and actual values. If a difference occurs, measures can then be taken to protect equipment and human life.

- 2 CO contacts with 6 A, forcibily guided according to EN 61810-3 type B
- Proven component in safety technology
- Diagnosis coverage of 99 %

General ordering data

Type	SRC-I CLIP HM RCI	Version
Order No.	1132090000	RIDERSERIES RCI, Retaining clip
GTIN (EAN)	4032248912209	
Qty.	20 ST	

Protection module

Pluggable protective modules for the RIDERSERIES RCI / RCM relay sockets, with optional protective functions.

- Optional with free-wheeling diode, protective varistor, load resistor or RC filter

General ordering data

Type	RIM-I 1 6/230V	Version
Order No.	8869580000	RIDERSERIES, Free-wheeling diode, Rated control voltage: 6...230 V
GTIN (EAN)	4032248614523	DC, Plug-in connection
Qty.	10 ST	
Type	RIM-I 3 6/60VAC RC	Version
Order No.	8869770000	RIDERSERIES, RC filter, Rated control voltage: 6...60 V UC, Plug-in
GTIN (EAN)	4032248606320	connection
Qty.	10 ST	

RCIKITP 24VAC 1CO LD/PB

Weidmüller Interface GmbH & Co. KG
Klingenbergstraße 26
D-32758 Detmold
Germany

www.weidmueller.com

Accessories

Protective varistor

Pluggable protective modules for the RIDERSERIES RCI / RCM relay sockets, with optional protective functions.
- With protective varistor
- For UC supply voltage

General ordering data

Type	RIM-I 4 24VUC VAR	Version
Order No.	8869710000	RIDERSERIES, Protective varistor, Rated control voltage: 24 V UC,
GTIN (EAN)	4032248606344	Plug-in connection
Qty.	10 ST	

LED

Pluggable protective modules for the RIDERSERIES RCI / RCM relay sockets, with optional protective functions.
- Optional with green or red LED
- For UC supply voltage

General ordering data

Type	RIM-I 3 6/24VUC	Version
Order No.	8869630000	RIDERSERIES, LED module, Rated control voltage: 6...24 V UC, Plug-in
GTIN (EAN)	4032248614578	connection
Qty.	10 ST	
Type	RIM-I 3 6/24VUC GN	Version
Order No.	8869640000	RIDERSERIES, LED module, Rated control voltage: 6...24 V UC, Plug-in
GTIN (EAN)	4032248614585	connection
Qty.	10 ST	
Type	RIM-I 3 24/60VUC	Version
Order No.	8869610000	RIDERSERIES, LED module, Rated control voltage: 24...60 V UC, Plug-
GTIN (EAN)	4032248614554	in connection
Qty.	10 ST	
Type	RIM-I 3 24/60VUC GN	Version
Order No.	8869620000	RIDERSERIES, LED module, Rated control voltage: 24...60 V UC, Plug-
GTIN (EAN)	4032248614561	in connection
Qty.	10 ST	

RCIKITP 24VAC 1CO LD/PB

Weidmüller Interface GmbH & Co. KG
Klingenbergstraße 26
D-32758 Detmold
Germany

www.weidmueller.com

Accessories

Blank

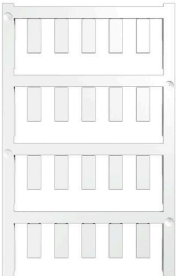

ESG is the tried-and-tested marker in MultiCard format for use on many well-known electrical devices. The result is high-quality device marking with a high-contrast appearance.
Various types are available for devices from manufacturers like Siemens, ABB, Beckhoff etc.
Advantages at a glance:
- Tags for universal usage, self-adhesive or clip-on tags, depending on type
- For aligned equipment, e.g. circuit breakers, we supply ESG markers for clipping onto tag rails
- Individual laser-quality printing according to specifications

For custom printing: Please send us a file of our labeling software M-Print PRO or M-Print PRO Online (without installation) for your labeling specifications.

General ordering data

Type	ESG 6/15 K MC NE GE	Version
Order No.	1880130000	ESG, Device markers x 15 mm, PA 66, Colour: yellow, Self-adhesive
GTIN (EAN)	4032248478910	
Qty.	200 ST	
Type	ESG 6/15 K MC NE WS	Version
Order No.	1880100000	ESG, Device markers x 15 mm, PA 66, Colour: white, Self-adhesive
GTIN (EAN)	4032248478781	
Qty.	200 ST	

Slotted screwdriver

VDE insulated screwdriver sets, for working on live parts up to 1000 V AC and 1500 V DC, DIN EN 60900. IEC 900. Each piece is "GS" safety tested. Blade made from fully hardened, high-alloy chromium-vanadium-molybdenum steel, gun-metal finish.

General ordering data

Type	SDIS SLIM 0.6X3.5X100	Version
Order No.	2749610000	Mounting tool, Blade width (B): 3.5 mm, Blade length: 100 mm, Blade
GTIN (EAN)	4050118896350	thickness (A): 0.6 mm
Qty.	1 ST	
Type	SDIZ 0.6X3.5X100	Version
Order No.	2749980000	Screwdriver, Blade length: 100 mm, Blade thickness (A): 0.6 mm
GTIN (EAN)	4050118897289	
Qty.	1 ST	
Type	SDS 0.6X3.5X100	Version
Order No.	2749340000	Screwdriver, Blade width (B): 3.5 mm, Blade length: 100 mm, Blade
GTIN (EAN)	4050118895568	thickness (A): 0.6 mm
Qty.	1 ST	

RCIKITP 24VAC 1CO LD/PB

Weidmüller Interface GmbH & Co. KG
Klingenbergstraße 26
D-32758 Detmold
Germany

www.weidmueller.com

Accessories

ESG 6/15

Guaranteed long service life: ESG
The multi-colour and multi-format labels have a strong adhesive layer to ensure the best possible adhesion to the underlying surface. Double laminated polyester makes the basic material very thin and yet extremely tear-resistant.
Your benefits with MultiMark
- “Different materials for various requirements”
- Can be used with equipment from many manufacturers
- Device markers with a familiar design

General ordering data

Type	ESG 6/15 MM WS	Version
Order No.	2619940000	ESG, Device markers, 6 x 15 mm, white
GTIN (EAN)	4050118626148	
Qty.	3000 ST	

ESG 6/17

Guaranteed long service life: ESG
The multi-colour and multi-format labels have a strong adhesive layer to ensure the best possible adhesion to the underlying surface. Double laminated polyester makes the basic material very thin and yet extremely tear-resistant.
Your benefits with MultiMark
- “Different materials for various requirements”
- Can be used with equipment from many manufacturers
- Device markers with a familiar design

General ordering data

Type	ESG 6/17 MM WS	Version
Order No.	2005100000	ESG, Device markers, 6 x 17 mm, white
GTIN (EAN)	4050118390728	
Qty.	3000 ST	

Blank

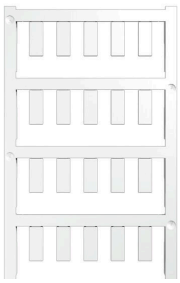

ESG is the tried-and-tested marker in MultiCard format for use on many well-known electrical devices. The result is high-quality device marking with a high-contrast appearance.
Various types are available for devices from manufacturers like Siemens, ABB, Beckhoff etc.
Advantages at a glance:
- Tags for universal usage, self-adhesive or clip-on tags, depending on type
- For aligned equipment, e.g. circuit breakers, we supply ESG markers for clipping onto tag rails
- Individual laser-quality printing according to specifications

For custom printing: Please send us a file of our labeling software M-Print PRO or M-Print PRO Online (without installation) for your labeling specifications.

RCIKITP 24VAC 1CO LD/PB

Weidmüller Interface GmbH & Co. KG
Klingenbergstraße 26
D-32758 Detmold
Germany

www.weidmueller.com

Accessories

General ordering data

Type	ESG 6/15 SRC-I MC NE WS	Version
Order No.	2558350000	ESG, Device markers x 15 mm, PA 66, Colour: white, pluggable
GTIN (EAN)	4050118569063	
Qty.	200 ST	