Data sheet

DRM570012L

Weidmüller Interface GmbH & Co. KG
Klingenbergstraße 26
D-32758 Detmold
Germany

www.weidmueller.com

Product image

Similar to illustration

Individual relays within the D-SERIES DRM
- 4 CO contact
- AC coils
- With integrated status LED

General ordering data

Version	D-SERIES DRM, Relay, Number of contacts: 4, CO contact, AgNi flash gold-plated, Rated control voltage: 12 V DC, Continuous current: 5 A, Plug-in connection
Order No.	7760056087
Type	DRM570012L
GTIN (EAN)	4032248855773
Qty.	20 items

DRM570012L

Weidmüller Interface GmbH & Co. KG
Klingenbergstraße 26
D-32758 Detmold
Germany

www.weidmueller.com

Technical data

Approvals

Approvals	
ROHS	Conform
UL File Number Search	UL Website
Certificate No. (cURus)	E312083

Dimensions and weights

Depth	35.7 mm	Depth (inches)	1.4055 inch
Height	27.4 mm	Height (inches)	1.0787 inch
Width	21 mm	Width (inches)	0.8268 inch
Net weight	33.7 g		

Temperatures

Storage temperature	-40 °C...70 °C	Ambient temperature	-40 °C...60 °C
Operating temperature		Humidity	35...85 % rel. humidity, no condensation

Environmental Product Compliance

RoHS Compliance Status	Compliant without exemption
REACH SVHC	No SVHC above 0.1 wt%

Rated data UL

Certificate No. (cURus)	E312083

Control side

Rated control voltage	12 V DC	Rated current DC	75 mA
Power rating	0.9 W	Coil resistance	160 Ω ± 10 %
Status indicator	Green LED		

Load side

Rated switching voltage	250 V AC	Continuous current	5 A
Max. switching frequency at rated load	0.1 Hz	Inrush current	10 A / 50 ms
AC switching capacity (resistive), max.	1250 VA	DC switching capacity (resistive), max.	120 W @ 24 V
Switch-on delay	<20 ms	Switch-off delay	<20 ms
Contact type	4 CO contact (AgNi flash gold-plated)	Mechanical service life	20 x 106 switching cycles
Min. switching power	10 mA @ 12 V, 100 mA @ 5 V		

General data

Test button available	No	
Mechanical switch position indicator	Yes	
Colour	Transparent	
UL94 flammability rating component	Component	Relay cover
	UL94 flammability rating	V-2
	Component	Relay baseplate

Weidmüller Interface GmbH & Co. KG
Klingenbergstraße 26
D-32758 Detmold
Germany

www.weidmueller.com

Technical data

UL94 flammability rating	V-0
Component	Relay status indicator
UL94 flammability rating	HB

Insulation coordination

Rated voltage	250 V	Pollution severity	2
Surge voltage category	III	Clearance and creepage distances for control side - load side	≥ 5.5 mm
Dielectric strength for control side - load side	1.8 kVeff /1 min.	Dielectric strength of neighbouring contacts	1 kVeff / 1 min
Dielectric strength of open contact	1 kVeff / 1 min	Impulse withstand voltage	6 kV (1.2/50 µs)
Protection degree	IP20		

Further details of approvals / standards

Certificate No. (cURus)	E312083

Connection data

Wire connection method	Plug-in connection

Classifications

ETIM 8.0	EC001437	ETIM 9.0	EC001437
ETIM 10.0	EC001437	ECLASS 14.0	27-37-16-01
ECLASS 15.0	27-37-16-01		

DRM570012L

Weidmüller Interface GmbH & Co. KG
Klingenbergstraße 26
D-32758 Detmold
Germany

www.weidmueller.com

Drawings

Wiring diagram

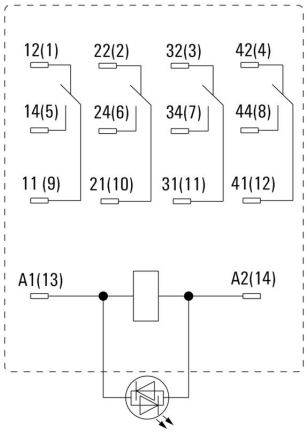

View of Pins from below

Graph

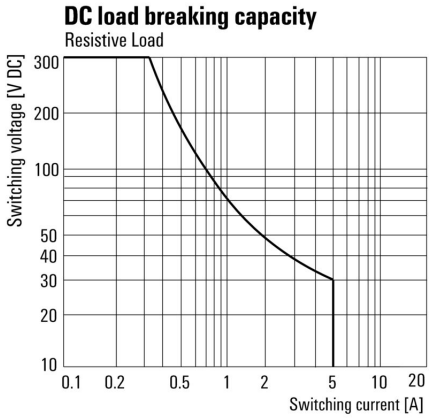

DC load limit curve Resistive load

Graph

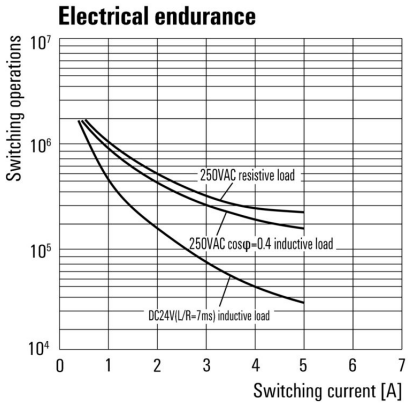

Electrical service life

Graph

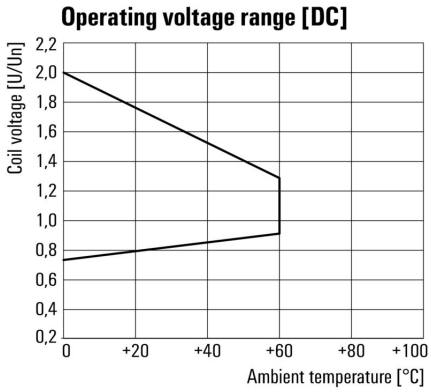

DC operational voltage range

Dimensional drawing

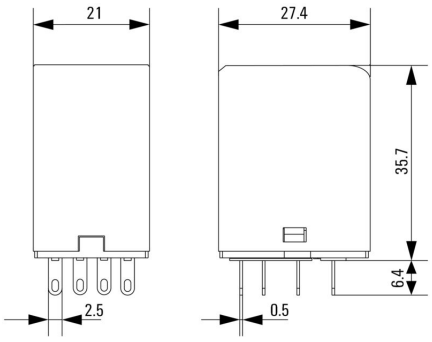

Weidmüller Interface GmbH & Co. KG
Klingenbergstraße 26
D-32758 Detmold
Germany

www.weidmueller.com

Drawings

Miscellaneous

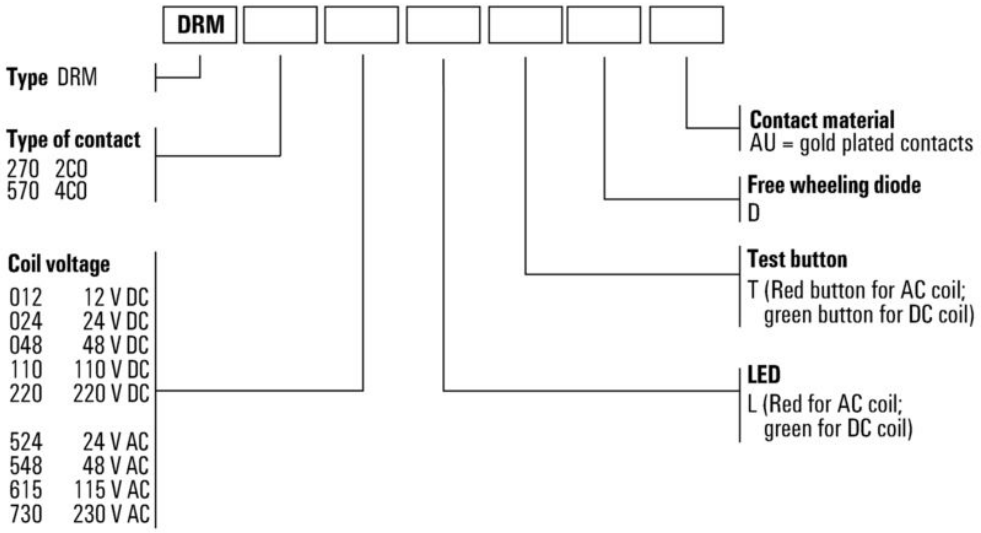

Type codes

Weidmüller Interface GmbH & Co. KG
Klingenbergstraße 26
D-32758 Detmold
Germany

www.weidmueller.com

Accessories

Sockets

Relay sockets for the D-SERIES DRM relays
- 2 and 4 CO contacts
- Screw and PUSH IN connection
- Standard and low heights

General ordering data

Type	FS 4CO	Version
Order No.	7760056107	D-SERIES DRM, Relay socket, Number of contacts: 4, CO contact,
GTIN (EAN)	4032248855575	Continuous current: 10 A, Screw connection
Qty.	10 ST	
Type	SCM 4CO ECO	Version
Order No.	7760056264	D-SERIES DRM, Relay socket, Number of contacts: 4, CO contact,
GTIN (EAN)	6944169662973	Continuous current: 6 A, Screw connection
Qty.	10 ST	
Type	SCM 4CO P	Version
Order No.	7760056363	D-SERIES DRM, Relay socket, Number of contacts: 4, CO contact,
GTIN (EAN)	6944169772276	Continuous current: 6 A, PUSH IN
Qty.	10 ST	

Retaining clips

Retaining clip for D-SERIES DRM relays
- Metal and plastic retaining clip

General ordering data

Type	DRM/DRL CLIP M	Version
Order No.	7760056108	D-SERIES, Retaining clip
GTIN (EAN)	4032248855568	
Qty.	10 ST	
Type	SCM CLIP P	Version
Order No.	7760056367	D-SERIES DRM, Retaining clip
GTIN (EAN)	6944169773334	
Qty.	5 ST	

Weidmüller Interface GmbH & Co. KG
Klingenbergstraße 26
D-32758 Detmold
Germany

www.weidmueller.com

Accessories

LED

Pluggable protective modules for the D-SERIES relay sockets, with optional protective functions.
• With green LED

General ordering data

Type	RIM 3 6/24VUC	Version
Order No.	7940018457	D-SERIES, LED module, Rated control voltage: 6...24 V UC, Plug-in
GTIN (EAN)	4032248878192	connection
Qty.	10 ST	

LED / free-wheel diode

Pluggable protective modules for the D-SERIES relay sockets, with optional protective functions.
• With green LED and free-wheeling diode

General ordering data

Type	RIM 2 6/24VDC	Version
Order No.	7760056015	D-SERIES, LED module with freewheel diode, Rated control voltage:
GTIN (EAN)	4032248878116	6...24 V DC, Plug-in connection
Qty.	10 ST	

Protection modules

Pluggable protective modules for the D-SERIES relay sockets, with optional protective functions.
• With free-wheeling diode or RC filter

General ordering data

Type	RIM 1 6/230VDC	Version
Order No.	7760056169	D-SERIES, Free-wheeling diode, Rated control voltage: 6...230 V, Plug-
GTIN (EAN)	4032248967728	in connection
Qty.	10 ST	

Weidmüller Interface GmbH & Co. KG
Klingenbergstraße 26
D-32758 Detmold
Germany

www.weidmueller.com

Accessories

Blank

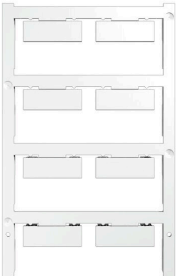

ESG is the tried-and-tested marker in MultiCard format for use on many well-known electrical devices. The result is high-quality device marking with a high-contrast appearance.
Various types are available for devices from manufacturers like Siemens, ABB, Beckhoff etc.
Advantages at a glance:

- Tags for universal usage, self-adhesive or clip-on tags, depending on type
- For aligned equipment, e.g. circuit breakers, we supply ESG markers for clipping onto tag rails
- Individual laser-quality printing according to specifications

For custom printing: Please send us a file of our labeling software M-Print PRO or M-Print PRO Online (without installation) for your labeling specifications.

General ordering data

Type	ESG 9/26 SCM ECO MC NE ...	Version
Order No.	1520980000	ESG, Device markers x 26 mm, PA 66, Colour: white, pluggable
GTIN (EAN)	4050118327939	
Qty.	80 ST	
Type	ESG 9/26 SCM ECO MC NE ...	Version
Order No.	1521000000	ESG, Device markers x 26 mm, PA 66, Colour: grey, pluggable
GTIN (EAN)	4050118327878	
Qty.	80 ST	
Type	ESG 9/26 SCM ECO MC NE ...	Version
Order No.	1520990000	ESG, Device markers x 26 mm, PA 66, Colour: yellow, pluggable
GTIN (EAN)	4050118327861	
Qty.	80 ST	

Custom printing

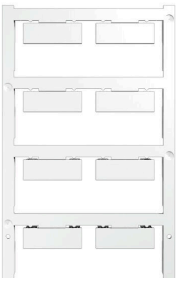

ESG is the tried-and-tested marker in MultiCard format for use on many well-known electrical devices. The result is high-quality device marking with a high-contrast appearance.
Various types are available for devices from manufacturers like Siemens, ABB, Beckhoff etc.
Advantages at a glance:

- Tags for universal usage, self-adhesive or clip-on tags, depending on type
- For aligned equipment, e.g. circuit breakers, we supply ESG markers for clipping onto tag rails
- Individual laser-quality printing according to specifications

For custom printing: Please send us a file of our labeling software M-Print PRO or M-Print PRO Online (without installation) for your labeling specifications.

Weidmüller Interface GmbH & Co. KG
Klingenbergstraße 26
D-32758 Detmold
Germany

www.weidmueller.com

Accessories

General ordering data

Type	ESG 9/26 SCM ECO MC SDR	Version
Order No.	1525800000	ESG, Device markers x 26 mm, PA 66, Colour: To customer
GTIN (EAN)	4050118331875	specification, pluggable
Qty.	16 ST	

Blank

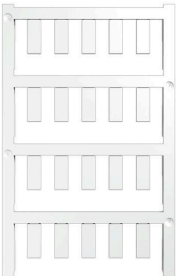

ESG is the tried-and-tested marker in MultiCard format for use on many well-known electrical devices. The result is high-quality device marking with a high-contrast appearance.
Various types are available for devices from manufacturers like Siemens, ABB, Beckhoff etc.
Advantages at a glance:

- Tags for universal usage, self-adhesive or clip-on tags, depending on type
- For aligned equipment, e.g. circuit breakers, we supply ESG markers for clipping onto tag rails
- Individual laser-quality printing according to specifications

For custom printing: Please send us a file of our labeling software M-Print PRO or M-Print PRO Online (without installation) for your labeling specifications.

General ordering data

Type	ESG 6/15 K MC NE WS	Version
Order No.	1880100000	ESG, Device markers x 15 mm, PA 66, Colour: white, Self-adhesive
GTIN (EAN)	4032248478781	
Qty.	200 ST	
Type	ESG 6/15 K MC NE GE	Version
Order No.	1880130000	ESG, Device markers x 15 mm, PA 66, Colour: yellow, Self-adhesive
GTIN (EAN)	4032248478910	
Qty.	200 ST	
Type	ESG 6/17 K MC NE GE	Version
Order No.	1880110000	ESG, Device markers x 17 mm, PA 66, Colour: yellow, Self-adhesive
GTIN (EAN)	4032248478798	
Qty.	200 ST	
Type	ESG 6/17 K MC NE WS	Version
Order No.	1880120000	ESG, Device markers x 17 mm, PA 66, Colour: white, Self-adhesive
GTIN (EAN)	4032248478804	
Qty.	200 ST	

Weidmüller Interface GmbH & Co. KG
Klingenbergstraße 26
D-32758 Detmold
Germany

www.weidmueller.com

Accessories

ESG 6/15

Guaranteed long service life: ESG
The multi-colour and multi-format labels have a strong adhesive layer to ensure the best possible adhesion to the underlying surface. Double laminated polyester makes the basic material very thin and yet extremely tear-resistant.
Your benefits with MultiMark
• “Different materials for various requirements”
• Can be used with equipment from many manufacturers
• Device markers with a familiar design

General ordering data

Type	ESG 6/15 MM WS	Version
Order No.	2619940000	ESG, Device markers, 6 x 15 mm, white
GTIN (EAN)	4050118626148	
Qty.	3000 ST	

ESG 6/17

Guaranteed long service life: ESG
The multi-colour and multi-format labels have a strong adhesive layer to ensure the best possible adhesion to the underlying surface. Double laminated polyester makes the basic material very thin and yet extremely tear-resistant.
Your benefits with MultiMark
• “Different materials for various requirements”
• Can be used with equipment from many manufacturers
• Device markers with a familiar design

General ordering data

Type	ESG 6/17 MM WS	Version
Order No.	2005100000	ESG, Device markers, 6 x 17 mm, white
GTIN (EAN)	4050118390728	
Qty.	3000 ST	

Weidmüller Interface GmbH & Co. KG
Klingenbergstraße 26
D-32758 Detmold
Germany

www.weidmueller.com

Counterpart

Sockets

Relay sockets for the D-SERIES DRM relays
- 2 and 4 CO contacts
- Screw and PUSH IN connection
- Standard and low heights

General ordering data

Type	SCM 4CO ECO	Version
Order No.	7760056264	D-SERIES DRM, Relay socket, Number of contacts: 4, CO contact,
GTIN (EAN)	6944169662973	Continuous current: 6 A, Screw connection
Qty.	10 ST	
Type	FS 4CO	Version
Order No.	7760056107	D-SERIES DRM, Relay socket, Number of contacts: 4, CO contact,
GTIN (EAN)	4032248855575	Continuous current: 10 A, Screw connection
Qty.	10 ST	
Type	SCM 4CO P	Version
Order No.	7760056363	D-SERIES DRM, Relay socket, Number of contacts: 4, CO contact,
GTIN (EAN)	6944169772276	Continuous current: 6 A, PUSH IN
Qty.	10 ST	