Data sheet

SAIBGP-M-4A-M12-WDF

Weidmüller Interface GmbH & Co. KG
Klingenbergstraße 26
D-32758 Detmold
Germany

www.weidmueller.com



General ordering data

Order No.	3150950000
Type	SAIBGP-M-4A-M12-WDF
GTIN (EAN)	4099987610872
Qty.	1 items

Data sheet

SAIBGP-M-4A-M12-WDF

Weidmüller Interface GmbH & Co. KG
Klingenbergstraße 26
D-32758 Detmold
Germany

www.weidmueller.com

Technical data

Approvals

Approvals	
ROHS	Conform
UL File Number Search	UL Website
Certificate no. (cULus)	E307231

Dimensions and weights

Diameter	29 mm	Wall thickness, max.	5 mm
Net weight	27 g		

Environmental Product Compliance

RoHS Compliance Status	Compliant without exemption
REACH SVHC	No SVHC above 0.1 wt%

Technical data customisable plug-in connectors

Number of poles	4	
Coding	A-coded	
Contact surface	Ni/Au	
LED	No	
Type of connection	PUSH IN	
Housing main material	PA 66	
Insulation resistance	≥ 100 MΩ	
Cable diameter, max.	8 mm	
Cable diameter, min.	4 mm	
Conductor cross-section, max.	0.75 mm²	
Conductor cross-section, min.	0.14 mm²	
Nominal voltage	48 V	
Nominal current	4 A	
Protection degree	IP67	
Plugging cycles	≥ 100	
Pollution severity	3	
Gender of contact	Female	
Rated voltage	Rated voltage	48 V
	Voltage type	AC
	Rated voltage	60 V
	Voltage type	DC
Shield connection	No	
Threaded ring material	Diecast zinc	
Temperature range of housing	-40 … +85 ° C	

Standards

Connector standard	IEC 61076-2-101

General technical specifications

Number of poles	4	Coding	A-coded
Connection thread	M12	Contact surface	Ni/Au
LED	No	Type of connection	PUSH IN
UL 94 flammability rating	V-0	Housing main material	PA 66

SAIBGP-M-4A-M12-WDF

Weidmüller Interface GmbH & Co. KG
Klingenbergstraße 26
D-32758 Detmold
Germany

www.weidmueller.com

Technical data

Insulation resistance	≥ 100 MΩ	Wire cross-section, solid, max.	0.75 mm²
Wire cross-section, solid, min.	0.14 mm²	Wire connection cross-section, finely stranded, max.	0.75 mm²
Wire connection cross section, finely stranded, min.	0.14 mm²	Nominal voltage	48 V
Nominal current	4 A	Protection degree	IP67
Plugging cycles	≥ 100	Pollution severity	3
Threaded ring material	Diecast zinc	Temperature range of housing	-40 … +85 ° C

Classifications

ETIM 8.0	EC002635	ETIM 9.0	EC002635
ETIM 10.0	EC002635	ECLASS 14.0	27-44-01-16
ECLASS 15.0	27-44-01-16		

SAIBGP-M-4A-M12-WDF

Weidmüller Interface GmbH & Co. KG
Klingenbergstraße 26
D-32758 Detmold
Germany

www.weidmueller.com

Drawings

Dimensioned drawing

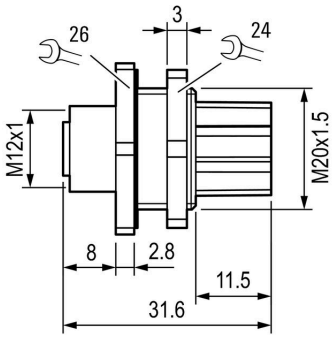

Pole scheme

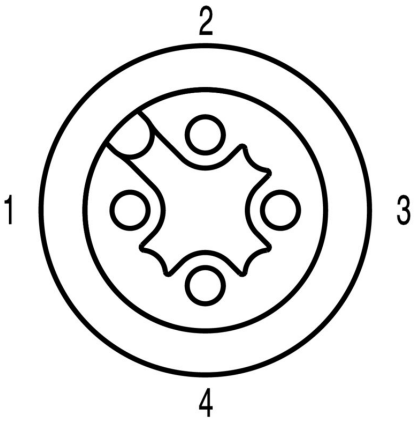



SAIBGP-M-4A-M12-WDF

Weidmüller Interface GmbH & Co. KG
Klingenbergstraße 26
D-32758 Detmold
Germany

www.weidmueller.com

Drawings

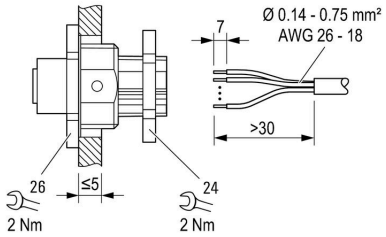



SAIBGP-M-4A-M12-WDF

Weidmüller Interface GmbH & Co. KG
Klingenbergstraße 26
D-32758 Detmold
Germany

www.weidmueller.com

Drawings

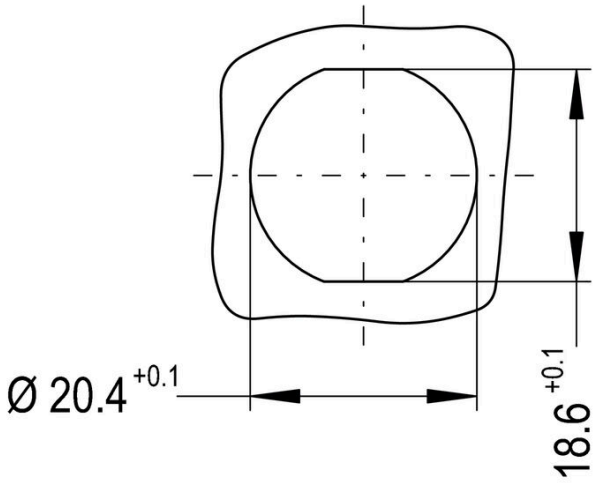

SAIBGP-M-4A-M12-WDF

Weidmüller Interface GmbH & Co. KG
Klingenbergstraße 26
D-32758 Detmold
Germany

www.weidmueller.com

Accessories

Brass nuts for EMC



In addition to cable glands for a wide range of applications, the product portfolio is rounded off by plugs, pressure compensation elements, adaptors and the corresponding accessories such as locknuts, sealing rings, flat washers and earthing rings.

General ordering data

Type	SKMU EMV M20	Version
Order No.	1777630000	SKMU MS EMV (brass locknut - EMC), Locknut, M 20, 3.6 mm, Brass,
GTIN (EAN)	4032248157907	nickel-plated
Qty.	100 ST	