Data sheet

HDC HDD 56 FC EX 1000

Weidmüller Interface GmbH & Co. KG
Klingenbergstraße 26
D-32758 Detmold
Germany

www.weidmueller.com

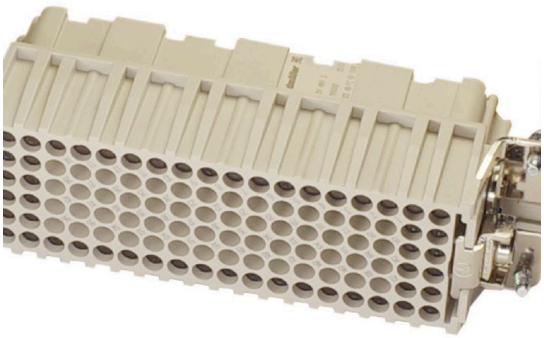

The option of separating cables in Zone 2 that comply with the following approvals ATEX: T II 3G Ex ec IIC T6 Gc or IECEX: Ex ec IIC T6 Gc simplifies installation, service and enables better preparation. The approved connectors offered here must always be used complete with the corresponding approved housings and inserts and may only be disconnected without load.

General ordering data

Version	HDC insert, Female, 1000 V, Number of poles: 56, Crimp connection, Installation size: 8
Order No.	3116680000
Type	HDC HDD 56 FC EX 1000
GTIN (EAN)	4099987235907
Qty.	1 items

HDC HDD 56 FC EX 1000

Weidmüller Interface GmbH & Co. KG
Klingenbergstraße 26
D-32758 Detmold
Germany

www.weidmueller.com

Technical data

Approvals

Approvals	
UL File Number Search	UL Website
Certificate No. (cURus)	E92202

Dimensions and weights

Depth	34 mm	Depth (inches)	1.3386 inch
Width	84 mm	Width (inches)	3.3071 inch
Net weight	96 g		

Temperatures

Limit temperature	-20 °C ... 80 °C

Environmental Product Compliance

RoHS Compliance Status	Compliant without exemption	
REACH SVHC	No SVHC above 0.1 wt%	
Chemical resistance	Substance	Acetone
	Chemical resistance	Resistant
	Substance	Ammonia, watery
	Chemical resistance	Conditionally resistant
	Substance	Petrol
	Chemical resistance	Resistant
	Substance	Benzene
	Chemical resistance	Resistant
	Substance	Diesel oil
	Chemical resistance	Conditionally resistant
	Substance	Acetic acid, concentrated
	Chemical resistance	Resistant
	Substance	Potassium hydroxide
	Chemical resistance	Conditionally resistant
	Substance	Methanol
	Chemical resistance	Conditionally resistant
	Substance	Motor oil
	Chemical resistance	Conditionally resistant
	Substance	Lye, diluted
	Chemical resistance	Resistant
	Substance	Hydrochlorofluorocarbons
	Chemical resistance	Conditionally resistant
	Substance	Outdoor use
	Chemical resistance	Conditionally resistant

Dimensions

Width	84 mm

General data

Number of poles	56	Type of connection	Crimp connection
Installation size	8	UL 94 flammability rating	V-0

HDC HDD 56 FC EX 1000

Weidmüller Interface GmbH & Co. KG
Klingenbergstraße 26
D-32758 Detmold
Germany

www.weidmueller.com

Technical data

Colour	grey	Insulating material	Polycarbonate
Type	Female	Series	HDD
Rated voltage (DIN EN 61984)	1000 V	Free from halogens	false
BG	8	Protection degree	IP55

Rating data IECEx/ATEX

Certificate No. (IECEX)	TUEV24ATEX9197X	Current (IECEX)	3 A
Current (ATEX)	3 A	Certificate No. (ATEX)	IECEXTUR24.0077X
Wire cross section max. (IECEX)	2.5 mm²	Max. voltage (ATEX)	250 V
Wire cross section max. (ATEX)	2.5 mm²	Max. voltage (IECEX)	250 V

Connection data PE

Connection type PE	Crimp connection

Version

Stripping length, rated connection	8 mm	Type of connection	Crimp connection
Installation size	8	Conductor cross-section, max.	2.5 mm²
Conductor cross-section, min.	0.5 mm²	BG	8

Classifications

ETIM 8.0	EC000438	ETIM 9.0	EC000438
ETIM 10.0	EC000438	ECLASS 14.0	27-44-02-05
ECLASS 15.0	27-44-02-05		

HDC HDD 56 FC EX 1000

Weidmüller Interface GmbH & Co. KG
Klingenbergstraße 26
D-32758 Detmold
Germany

www.weidmueller.com

Drawings

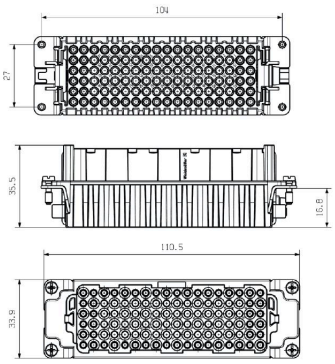

HDC HDD 56 FC EX 1000

Weidmüller Interface GmbH & Co. KG
Klingenbergstraße 26
D-32758 Detmold
Germany

www.weidmueller.com

Accessories

DSTV

Various accessories are available for our inserts. This includes coding elements for the inserts.

General ordering data

Type	DSTV COBU5	Version
Order No.	1471500000	Heavy-duty connectors, Accessories, Coding element
GTIN (EAN)	4008190178543	
Qty.	100 ST	
Type	DSTV COST4	Version
Order No.	1471300000	Heavy-duty connectors, Accessories, Coding System
GTIN (EAN)	4008190017354	
Qty.	100 ST	

Crimp contacts HD

Crimps provide a electrical and mechanical connection between wire and contact that is both secure and reliable. The optimal crimp connection is gas-tight and corrosion-resistant.

General ordering data

Type	HDC-C-HD-BM0.14-0.37AG	Version
Order No.	1651570000	Heavy-duty connectors, Crimp contact, HD, HDD, HQ, MixMate,
GTIN (EAN)	4008190400248	Female, Conductor cross-section, max.: 0.37, turned, Copper alloy
Qty.	100 ST	
Type	HDC-C-HD-BM0.14-0.37AU	Version
Order No.	1651670000	Heavy-duty connectors, Crimp contact, HD, HDD, HQ, MixMate,
GTIN (EAN)	4008190400347	Female, Conductor cross-section, max.: 0.37, turned, Copper alloy
Qty.	100 ST	
Type	HDC-C-HD-BM0.5AG	Version
Order No.	1651580000	Heavy-duty connectors, Crimp contact, HD, HDD, HQ, MixMate,
GTIN (EAN)	4008190400255	Female, Conductor cross-section, max.: 0.5, turned, Copper alloy
Qty.	100 ST	
Type	HDC-C-HD-BM0.5AU	Version
Order No.	1651680000	Heavy-duty connectors, Crimp contact, HD, HDD, HQ, MixMate,
GTIN (EAN)	4008190400354	Female, Conductor cross-section, max.: 0.5, turned, Copper alloy
Qty.	100 ST	

HDC HDD 56 FC EX 1000

Weidmüller Interface GmbH & Co. KG
Klingenbergstraße 26
D-32758 Detmold
Germany

www.weidmueller.com

Accessories

Type	HDC-C-HD-BM0.75-1.00AG	Version
Order No.	1601760000	Heavy-duty connectors, Crimp contact, HD, HDD, HQ, MixMate,
GTIN (EAN)	4008190158354	Female, Conductor cross-section, max.: 1, turned, Copper alloy
Qty.	100 ST	
Type	HDC-C-HD-BM0.75-1.00AU	Version
Order No.	1651690000	Heavy-duty connectors, Crimp contact, HD, HDD, HQ, MixMate,
GTIN (EAN)	4008190400361	Female, Conductor cross-section, max.: 1, turned, Copper alloy
Qty.	100 ST	
Type	HDC-C-HD-BM1.5AG	Version
Order No.	1651600000	Heavy-duty connectors, Crimp contact, HD, HDD, HQ, MixMate,
GTIN (EAN)	4008190400279	Female, Conductor cross-section, max.: 1.5, turned, Copper alloy
Qty.	100 ST	
Type	HDC-C-HD-BM1.5AU	Version
Order No.	1651700000	Heavy-duty connectors, Crimp contact, HD, HDD, HQ, MixMate,
GTIN (EAN)	4008190400378	Female, Conductor cross-section, max.: 1.5, turned, Copper alloy
Qty.	100 ST	
Type	HDC-C-HD-BM2.5AG	Version
Order No.	1651610000	Heavy-duty connectors, Crimp contact, HD, HDD, HQ, MixMate,
GTIN (EAN)	4008190400286	Female, Conductor cross-section, max.: 2.5, turned, Copper alloy
Qty.	100 ST	
Type	HDC-C-HD-BM2.5AU	Version
Order No.	1651710000	Heavy-duty connectors, Crimp contact, HD, HDD, HQ, MixMate,
GTIN (EAN)	4008190400385	Female, Conductor cross-section, max.: 2.5, turned, Copper alloy
Qty.	100 ST	

Size 8 (24B)

The option of separating cables in Zone 2 that comply with the following approvals ATEX: T II 3G Ex ec IIC T6 Gc or IECEX: Ex ec IIC T6 Gc simplifies installation, service and enables better preparation. The approved connectors offered here must always be used complete with the corresponding approved housings and inserts and may only be disconnected without load.

General ordering data

Type	HDC 24B AS ATEX	Version
Order No.	3139930000	HDC enclosures, Installation size: 8, Protection degree: IP55, Bulkhead
GTIN (EAN)	4099987382298	housing, Clamping yoke connection, Standard
Qty.	1 ST	
Type	HDC 24B SS 1M40G ATEX	Version
Order No.	3139880000	HDC enclosures, Installation size: 8, Protection degree: IP55, Base
GTIN (EAN)	4099987382243	housing, Clamping yoke connection, Standard, Size of cable entries:
Qty.	1 ST	M 40
Type	HDC 24B SS 2M40G ATEX	Version
Order No.	3139890000	HDC enclosures, Installation size: 8, Protection degree: IP55, Base
GTIN (EAN)	4099987382250	housing, Clamping yoke connection, Standard, Size of cable entries:
Qty.	1 ST	M 40

HDC HDD 56 FC EX 1000

Weidmüller Interface GmbH & Co. KG
Klingenbergstraße 26
D-32758 Detmold
Germany

www.weidmueller.com

Accessories

Type	HDC 24B TOS 1M32G ATEX	Version
Order No.	3140010000	HDC enclosures, Installation size: 8, Protection degree: IP55, Plug
GTIN (EAN)	4099987382373	housing, Clamping yoke connection, Standard
Qty.	1 ST	
Type	HDC 24B TOS 2M32G ATEX	Version
Order No.	3140020000	HDC enclosures, Installation size: 8, Protection degree: IP55, Plug
GTIN (EAN)	4099987382380	housing, Clamping yoke connection, Standard
Qty.	1 ST	
Type	HDC 24B TSS 1M32G ATEX	Version
Order No.	3140030000	HDC enclosures, Installation size: 8, Protection degree: IP55, Plug
GTIN (EAN)	4099987382397	housing, Clamping yoke connection, Standard
Qty.	1 ST	
Type	HDC 24B TSS 1M40G ATEX	Version
Order No.	3140040000	HDC enclosures, Installation size: 8, Protection degree: IP55, Plug
GTIN (EAN)	4099987382403	housing, Clamping yoke connection, Standard, Size of cable entries:
Qty.	1 ST	M 40

Size 8

The option of separating cables in Zone 2 that comply with the following approvals ATEX: T II 3G Ex ec IIC T6 Gc or IECEX: Ex ec IIC T6 Gc simplifies installation, service and enables better preparation. The approved connectors offered here must always be used complete with the corresponding approved housings and inserts and may only be disconnected without load.

General ordering data

Type	HDC HDD 56 MC EX 1000	Version
Order No.	3116660000	HDC insert, Male, 1000 V, Number of poles: 56, Crimp connection,
GTIN (EAN)	4099987235785	Installation size: 8
Qty.	1 ST	
Type	HDC HDD 108 MC	Version
Order No.	1651210000	HDC insert, Male, 250 V, 10 A, Number of poles: 108, Crimp
GTIN (EAN)	4008190299811	connection, Installation size: 8
Qty.	1 ST	