Data sheet

CRM40024T

Weidmüller Interface GmbH & Co. KG
Klingenbergstraße 26
D-32758 Detmold
Germany

www.weidmueller.com

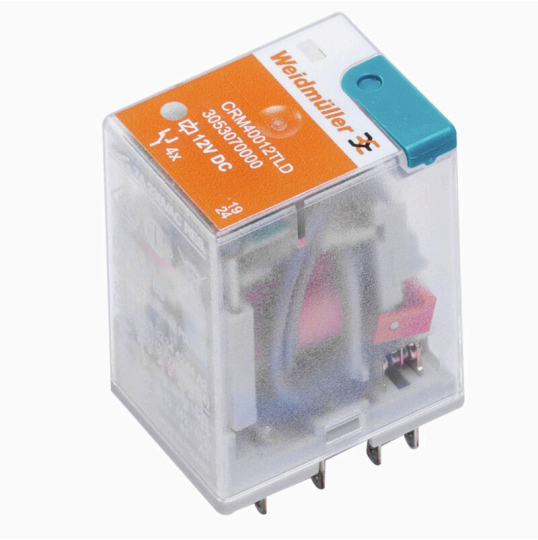

Individual relays within the CUBESERIES CRM
- Control voltages from 12 - 110 V DC and 24 - 230V AC
- 4 CO contact (7 A)
- With test buttons with colour coding (AC coil: orange, DC coil: blue)
- With mechanical status indicator

General ordering data

Version	CUBESERIES, Relay, Number of contacts: 4, CO contact AgNi, Rated control voltage: 24 V DC, Continuous current: 7 A, Plug-in connection, Test button available: Yes
Order No.	3053010000
Type	CRM40024T
GTIN (EAN)	4099987022835
Qty.	10 items

CRM40024T

Weidmüller Interface GmbH & Co. KG
Klingenbergstraße 26
D-32758 Detmold
Germany

www.weidmueller.com

Technical data

Approvals

Approvals	
ROHS	Conform
UL File Number Search	UL Website
Certificate No. (cURus)	E223474

Dimensions and weights

Depth	35.5 mm	Depth (inches)	1.3976 inch
Height	27.4 mm	Height (inches)	1.0787 inch
Width	21 mm	Width (inches)	0.8268 inch
Net weight	35 g		

Temperatures

Storage temperature	-40 °C...85 °C	Ambient temperature	-40 °C...70 °C
Operating temperature		Humidity	25 °C / 95 % rel. humidity, no condensation

Environmental Product Compliance

RoHS Compliance Status	Compliant without exemption
REACH SVHC	No SVHC above 0.1 wt%

Rated data UL

Certificate No. (cURus)	E223474

Control side

Rated control voltage	24 V DC	Rated current DC	37.8 mA
Power rating	0.9 W	Coil resistance	640 Ω ± 10 %
Status indicator	No		

Load side

Rated switching voltage	250 V AC	Continuous current	7 A
Max. switching frequency at rated load	0.1 Hz	Max. switching voltage, AC	250 V
Inrush current	16 A / 20 ms	AC switching capacity (resistive), max.	1500 VA
DC switching capacity (resistive), max.	168 W @ 24 V	Switch-on delay	≤ 20 ms
Switch-off delay	≤ 9 ms	Contact type	4 CO contact (AgNi)
Mechanical service life	2 x 107 switching cycles	Min. switching power	10 mA @ 12 V, 100 mA @ 5 V

General data

Operating altitude	≤ 2000 m, above sea level	Test button available	Yes
Version of test button	Lockable test button, Momentary test button	Mechanical switch position indicator	Yes
Colour	Transparent	UL 94 flammability rating	V-2

CRM40024T

Weidmüller Interface GmbH & Co. KG
Klingenbergstraße 26
D-32758 Detmold
Germany

www.weidmueller.com

Technical data

Insulation coordination

Rated voltage	250 V	Pollution severity	2
Surge voltage category	II	Dielectric strength for control side - load side	2.5 kVeff / 1 Min.
Dielectric strength of neighbouring contacts	2 kVeff / 1 min	Dielectric strength of open contact	1.5 kVeff /1 min.
Impulse withstand voltage	4 kV (1.2/50 µs)	Protection degree	IP40

Further details of approvals / standards

Certificate No. (CSA)	607178-80219312	Certificate No. (VDE)	40059812
Certificate No. (cURus)	E223474		

Connection data

Wire connection method	Plug-in connection	Pitch in mm (P)	5.00 mm

Classifications

ETIM 8.0	EC001437	ETIM 9.0	EC001437
ETIM 10.0	EC001437	ECLASS 14.0	27-37-16-01
ECLASS 15.0	27-37-16-01		

CRM40024T

Weidmüller Interface GmbH & Co. KG
Klingenbergstraße 26
D-32758 Detmold
Germany

www.weidmueller.com

Drawings

Connection diagram

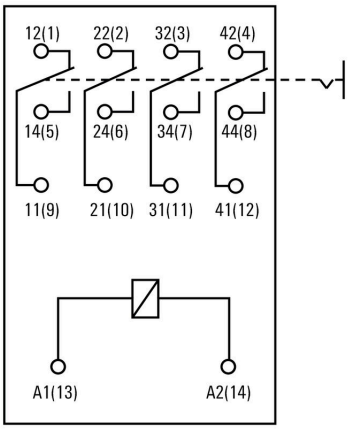

Graph

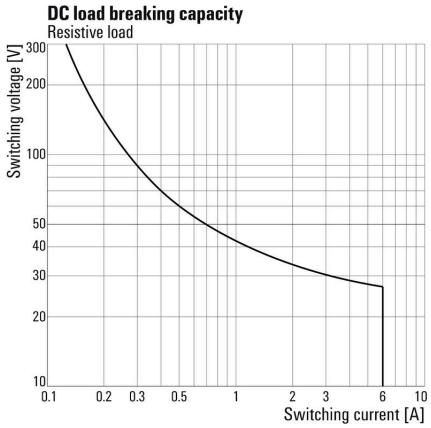

Graph

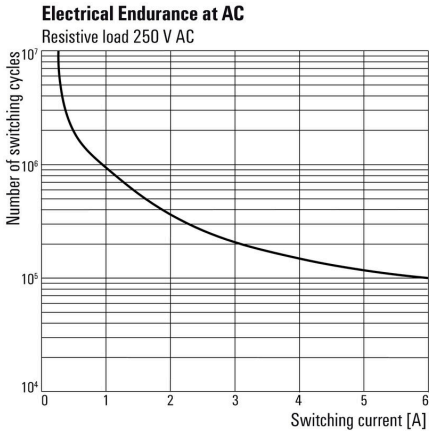

Graph

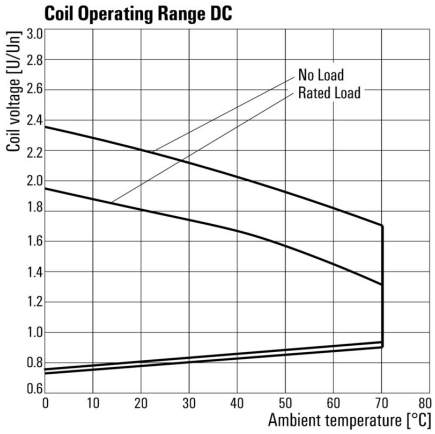

Dimensional drawing

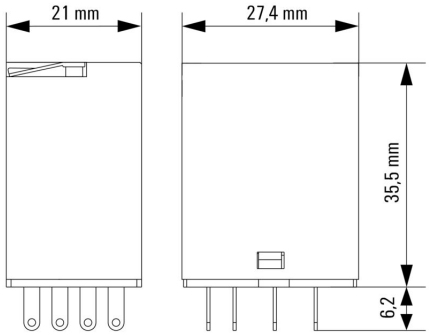

Weidmüller Interface GmbH & Co. KG
Klingenbergstraße 26
D-32758 Detmold
Germany

www.weidmueller.com

Drawings

Miscellaneous

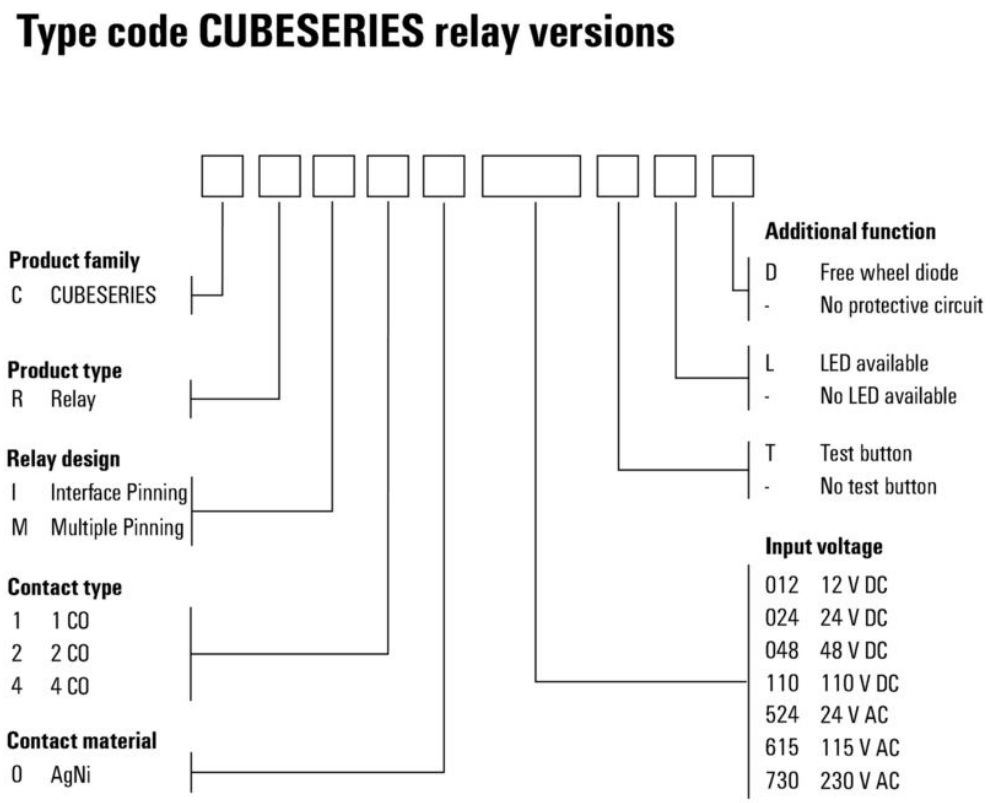

Type codes

Weidmüller Interface GmbH & Co. KG
Klingenbergstraße 26
D-32758 Detmold
Germany

www.weidmueller.com

Accessories

Protection modules

General ordering data

Type	CXX D 21N	Version
Order No.	3053270000	CUBESERIES, Free-wheeling diode, Rated control voltage: 6...230 V
GTIN (EAN)	4099987023092	DC, Plug-in connection
Qty.	20 ST	

LED and free-wheel diode

General ordering data

Type	CXX LD 41G	Version
Order No.	3053310000	CUBESERIES, LED module with freewheel diode, Rated control
GTIN (EAN)	4099987023115	voltage: 6...24 V DC, Plug-in connection
Qty.	20 ST	
Type	CXX LD 41R	Version
Order No.	3053290000	CUBESERIES, LED module with freewheel diode, Rated control
GTIN (EAN)	4099987023108	voltage: 6...24 V DC, Plug-in connection
Qty.	20 ST	

LED and free-wheeling diode

Weidmüller Interface GmbH & Co. KG
Klingenbergstraße 26
D-32758 Detmold
Germany

www.weidmueller.com

Accessories

General ordering data

Type	CXX LD 42G	Version
Order No.	3053340000	CUBESERIES, LED module with freewheel diode, Rated control
GTIN (EAN)	4099987023139	voltage: 24...60 V DC, Plug-in connection
Qty.	20 ST	

LED and free-wheel diode

General ordering data

Type	CXX LD 42R	Version
Order No.	3053320000	CUBESERIES, LED module with freewheel diode, Rated control
GTIN (EAN)	4099987023122	voltage: 24...60 V DC, Plug-in connection
Qty.	20 ST	

LED

General ordering data

Type	CXX L 61G	Version
Order No.	3053420000	CUBESERIES, LED module, Rated control voltage: 6...24 V UC, Plug-in
GTIN (EAN)	4099987023207	connection
Qty.	20 ST	
Type	CXX L 61R	Version
Order No.	3053410000	CUBESERIES, LED module, Rated control voltage: 6...24 V UC, Plug-in
GTIN (EAN)	4099987023191	connection
Qty.	20 ST	
Type	CXX L 62G	Version
Order No.	3053440000	CUBESERIES, LED module, Rated control voltage: 24...60 V UC, Plug-
GTIN (EAN)	4099987023221	in connection
Qty.	20 ST	
Type	CXX L 62R	Version
Order No.	3053430000	CUBESERIES, LED module, Rated control voltage: 24...60 V UC, Plug-
GTIN (EAN)	4099987023214	in connection
Qty.	20 ST	

Weidmüller Interface GmbH & Co. KG
Klingenbergstraße 26
D-32758 Detmold
Germany

www.weidmueller.com

Accessories

Relay sockets

Relay sockets for the CUBESERIES CRM relays
- 4 CO output version for 2 CO and 4 CO relays
- Screw and PUSH IN connection
- PUSH IN sockets with wide pushers for screwdrivers up to 1.0 x 5.5 mm blade size
- Various cross connection possibilities
- Matching accessories such as cross-connections, retaining clips and LED modules

General ordering data

Type	CSM P 4CO	Version
Order No.	3053140000	CUBESERIES, Relay socket, Number of contacts: 4, CO contact,
GTIN (EAN)	4099987022965	Continuous current: 8 A, PUSH IN
Qty.	10 ST	
Type	CSM S 4CO	Version
Order No.	3053160000	CUBESERIES, Relay socket, Number of contacts: 4, CO contact,
GTIN (EAN)	4099987022989	Continuous current: 6 A, Screw connection
Qty.	10 ST	

Cross-connections

General ordering data

Type	CXM CCP 2P BL	Version
Order No.	3053230000	CUBESERIES, Cross-connector
GTIN (EAN)	4099987023054	
Qty.	20 ST	
Type	CXM CCP 2P RD	Version
Order No.	3053220000	CUBESERIES, Cross-connector
GTIN (EAN)	4099987023047	
Qty.	20 ST	
Type	CXM CCP 8P BL	Version
Order No.	3053210000	CUBESERIES, Cross-connector
GTIN (EAN)	4099987023030	
Qty.	10 ST	
Type	CXM CCP 8P RD	Version
Order No.	3053200000	CUBESERIES, Cross-connector
GTIN (EAN)	4099987023023	
Qty.	10 ST	

Weidmüller Interface GmbH & Co. KG
Klingenbergstraße 26
D-32758 Detmold
Germany

www.weidmueller.com

Accessories

Type	CXM CCS 6P GY	Version
Order No.	3053180000	CUBESERIES, Cross-connector
GTIN (EAN)	4099987023009	
Qty.	2 ST	

Retaining clips

Retaining clips for CUBESERIES CRI relays.
Plastic retaining clip:
- With relay ejector function
- Marking slots for MultiFit markers
- Fits on relays with and without test button

Metal retaining clip:
- For a strong hold of the relay in the socket

General ordering data

Type	CXM CLIP P	Version
Order No.	3053240000	CUBESERIES, Retaining clip
GTIN (EAN)	4099987023061	
Qty.	10 ST	

Type	CXM CLIP M	Version
Order No.	3053190000	CUBESERIES, Retaining clip
GTIN (EAN)	4099987023016	
Qty.	25 ST	

Cross-connections

Cross-connection for the socktes in the CUBESERIES CRI.
- Versions with red and blue coloured plastic for potential coding

Versions for PUSH IN sockets:
- 8-pin cross connection for A1 and A2 of the coil
- 2-pin jumper to connect to the neighbored sockets
- 2-pin jumper to connect the output channels within one socket

Version for screw sockets:
- 8-pin cross connection to connect to the neighbored sockets

General ordering data

Type	CXX JMP 2P BL	Version
Order No.	3053260000	CUBESERIES, Cross-connector
GTIN (EAN)	4099987023085	
Qty.	30 ST	

Type	CXX JMP 2P RD	Version
Order No.	3053250000	CUBESERIES, Cross-connector
GTIN (EAN)	4099987023078	
Qty.	30 ST	

Weidmüller Interface GmbH & Co. KG
Klingenbergstraße 26
D-32758 Detmold
Germany

www.weidmueller.com

Counterpart

Relay sockets

Relay sockets for the CUBESERIES CRM relays
- 4 CO output version for 2 CO and 4 CO relays
- Screw and PUSH IN connection
- PUSH IN sockets with wide pushers for screwdrivers up to 1.0 x 5.5 mm blade size
- Various cross connection possibilities
- Matching accessories such as cross-connections, retaining clips and LED modules

General ordering data

Type	CSM P 4CO	Version
Order No.	3053140000	CUBESERIES, Relay socket, Number of contacts: 4, CO contact,
GTIN (EAN)	4099987022965	Continuous current: 8 A, PUSH IN
Qty.	10 ST	
Type	CSM S 4CO	Version
Order No.	3053160000	CUBESERIES, Relay socket, Number of contacts: 4, CO contact,
GTIN (EAN)	4099987022989	Continuous current: 6 A, Screw connection
Qty.	10 ST	