Data sheet

# CMA-A20-125-1A-0,5-2,5VA

**Weidmüller Interface GmbH & Co. KG**
Klingenbergstraße 26
D-32758 Detmold
Germany

www.weidmueller.com

Plug-on current transformers
Plug-on current transformers are used wherever high currents of up to 5000A need to be measured and processed. Our plug-on current transformers supply secondary currents of 1A or 5A. Weidmüller also offers compact low-power current transformers to convert currents of up to 600 A to voltages of up to 333 mV.

## General ordering data

| | |
|---|---|
| Version | Primary current: 125 A, Secondary current max.: 1 A, Load: 2.5 VA, Tolerance class: 0,5 |
| Order No. | 3008240000 |
| Type | CMA-A20-125-1A-0,5-2,5VA |
| GTIN (EAN) | 4099986909496 |
| Qty. | 1 items |
| Manufacturer | ENTES Elektronik |

# CMA-A20-125-1A-0,5-2,5VA

**Weidmüller Interface GmbH & Co. KG**
Klingenbergstraße 26
D-32758 Detmold
Germany

www.weidmueller.com

## Technical data

### Approvals

| | |
|---|---|
| Approvals | |
| ROHS | Conform |

### Dimensions and weights

| | | | |
|---|---|---|---|
| Depth | 57 mm | Depth (inches) | 2.2441 inch |
| Height | 65 mm | Height (inches) | 2.5591 inch |
| Width | 47 mm | Width (inches) | 1.8504 inch |
| Net weight | 209 g | | |

### Temperatures

| | | | |
|---|---|---|---|
| Storage temperature | | Operating temperature | -5 °C...40 °C |

### Environmental Product Compliance

| | |
|---|---|
| RoHS Compliance Status | Compliant |
| REACH SVHC | No SVHC above 0.1 wt% |

### Electrical attributes

| | | | |
|---|---|---|---|
| Tolerance class | 0,5 | Secondary current | 0...1 A |
| Load | 2.5 VA | Primary current | 125 A |

### Technical properties

| | | | |
|---|---|---|---|
| Protection degree | IP20 | Thermal rated continuous current Ithermal | 1.2 x Irated |
| Nominal frequency | 50 / 60 Hz | | |

### Insulation coordination

| | | | |
|---|---|---|---|
| Tolerance class | 0,5 | Insulation voltage | 3 kV / 1 min |

### Classifications

| | | | |
|---|---|---|---|
| ETIM 8.0 | EC002048 | ETIM 9.0 | EC002048 |
| ETIM 10.0 | EC002048 | ECLASS 14.0 | 27-21-09-02 |
| ECLASS 15.0 | 27-21-09-02 | | |

## CMA-A20-125-1A-0,5-2,5VA

**Weidmüller Interface GmbH & Co. KG**
Klingenbergstraße 26
D-32758 Detmold
Germany

www.weidmueller.com
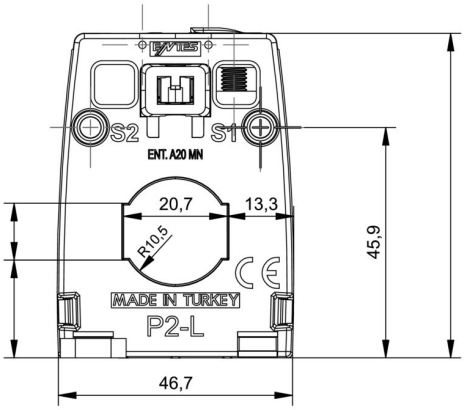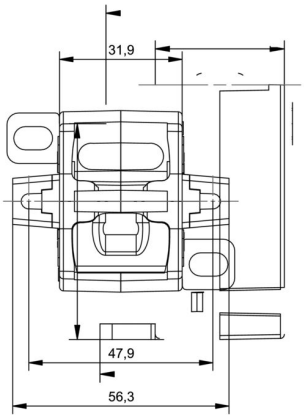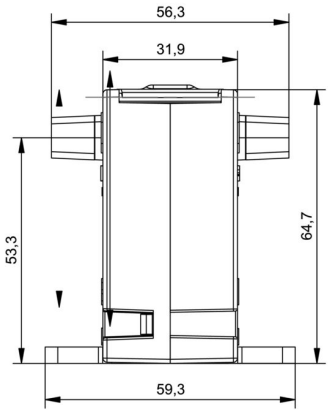
## Drawings