Data sheet

VPU AC I 3 R 300/12.5 LH

Weidmüller Interface GmbH & Co. KG
Klingenbergstraße 26
D-32758 Detmold
Germany

www.weidmueller.com

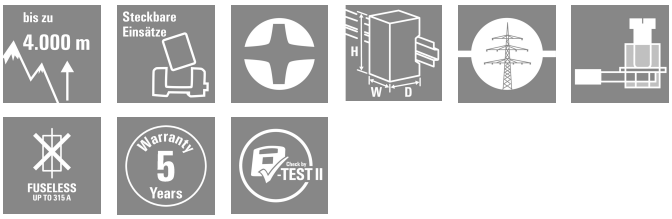

Weidmüller VPU I (Type I), VPU II (Type II) and VPU III (Type III) surge protection products effectively reduce the interference coupling that can occur due to transient surge voltages, even significantly below the limits prescribed by insulation co-ordination according to EN 60664-3 / DIN VDE 0110-3. This means that the whole installation is exposed to fewer malfunctions. The arresters are co-ordinated using technical means. This means that decoupling between Types I, II and III is unnecessary. The arresters are tested according to product standard IEC 61643-11 / DIN EN 61643-11 and can be installed in systems according to IEC 61643-12 / VDE 0675-6-12 and IEC 62305-4 / VDE 0185-4. This lightning and surge protection device is suited for installation in power supply systems. Weidmüller offers different products depending on the particular mains network type and voltage level. A special Type I and Type II protective device is even available for photovoltaic applications.

General ordering data

Version	Surge voltage arrester, Low voltage, Surge protection, with remote contact, TN-C
Order No.	2983560000
Type	VPU AC I 3 R 300/12.5 LH
GTIN (EAN)	4099986839687
Qty.	1 items

VPU AC I 3 R 300/12.5 LH

Weidmüller Interface GmbH & Co. KG
Klingenbergstraße 26
D-32758 Detmold
Germany

www.weidmueller.com

Technical data

Approvals

Approvals	
ROHS	Conform
UL File Number Search	UL Website
Certificate No. (cURus)	E3542610000

Dimensions and weights

Depth	70 mm	Depth (inches)	2.7559 inch
Height	105 mm	Height (inches)	4.1338 inch
Width	54 mm	Width (inches)	2.126 inch
Net weight	540 g		

Temperatures

Storage temperature	-40 °C...85 °C	Ambient temperature	...85 °C
Operating temperature	-40 °C...85 °C	Humidity at operating temperature	5 - 95% rel. humidity
Humidity	5 - 95% rel. humidity		

Environmental Product Compliance

RoHS Compliance Status	Compliant without exemption
REACH SVHC	No SVHC above 0.1 wt%

Rated data UL

Ambient temperature (operational), max.	85 °C	Rated Voltage UN	240 V
MCOV (L-PE)	300 V	Category	SPD TYPE 4CA
Ambient temperature (operational), min.	-45 °C	Certificate No. (cURus)	E3542610000
MODE	L-N	Measured. Limiting Voltage	1200 V
Voltage type	AC	UL Energy Networks	Delta System

Connection data, remote alert

Cross-section for connected wire, solid core, min.	0.14 mm²	Stripping length	8 mm
Connection type	PUSH IN	Cross-section for connected wire, solid core, max.	1.5 mm²

General data

Optical function display	green = OK; red = arrester is defective - replace	Version	Surge protection, with remote contact
Design	Installation housing; 3TE, Insta IP 20	UL 94 flammability rating	V-0
Colour	orange, black	Protection degree	IP20 in installed state
Mounting rail	TS 35	Operating altitude	≤ 4000 m

Insulation coordination acc. to EN 50178

Surge voltage category	III	Pollution severity	2

VPU AC I 3 R 300/12.5 LH

Weidmüller Interface GmbH & Co. KG
Klingenbergstraße 26
D-32758 Detmold
Germany

www.weidmueller.com

Technical data

Rated data IEC / EN

Number of poles	3	Leakage current at Un	6 µA
Signalling contact	250 V 1A 1CO	Rated voltage (AC)	230 V
Low voltage network	TN-C	Protection level, UP wire - wire	1500 V
Protection level, UP wire - PE	1500 V	Voltage type	AC
Temporary surge voltage (over-voltage) - TOV	337 V	Response time / fallback time	≤ 25 ns
Frequency range, max.	60 Hz	Frequency range, min.	50 Hz
Standards	IEC 61643-11, EN 61643-11, UL 1449	Lightning test current limp (10/350 µs) (L-PE)	12.5 kA
Requirements class, acc. to EN 61643-11	T1, T2	Requirements category acc. to IEC 61643-11	Type I, Type II
Max. continuous voltage, Uc (AC)	300 V	Mains voltage	230 V / 400 V
Energy coordination (≤10 m)	Type I, Type II, Type III	Discharge current In (8/20µs) wire-PE	20 kA
Discharge current Imax (8/20µs) wire-PE	50 kA	Protection level Up at IN (L/N-PE)	≤ 1.5 kV
Short-circuit current rating ISCCR	50 kA	Follow-on current extinguishing capability Ifi	Not available due for technical reasons
Integrated back-up fuse	No		

Connection data

Stripping length	18 mm	Wire connection method	Screw connection
Tightening torque, min.	3 Nm	Tightening torque, max.	4.5 Nm
Clamping range, rated connection	16 mm²	Clamping range, min.	1.5 mm²
Clamping range, max.	35 mm²	Wire cross-section, solid, min.	1.5 mm²
Wire cross-section, solid, max.	35 mm²	Wire connection cross section, finely stranded, min.	1.5 mm²
Wire connection cross section, finely stranded, max.	25 mm²	Connection cross-section, stranded, min.	1.5 mm²
Connection cross-section, stranded, max.	35 mm²		

Electrical data

Voltage type	AC

General data

Number of poles	3	Protection degree	IP20 in installed state
Colour	orange, black		

Guarantee

Time interval	5 years

Important note

Product information	For use in DC applications, please use the fuse of SIBA Type NH2XL aR/aSF DC 1500 V

Classifications

ETIM 8.0	EC001457	ETIM 9.0	EC001457
ETIM 10.0	EC001457	ECLASS 14.0	27-17-12-04
ECLASS 15.0	27-17-12-04		

VPU AC I 3 R 300/12.5 LH

Weidmüller Interface GmbH & Co. KG
Klingenbergstraße 26
D-32758 Detmold
Germany

www.weidmueller.com

Drawings

Electric symbol

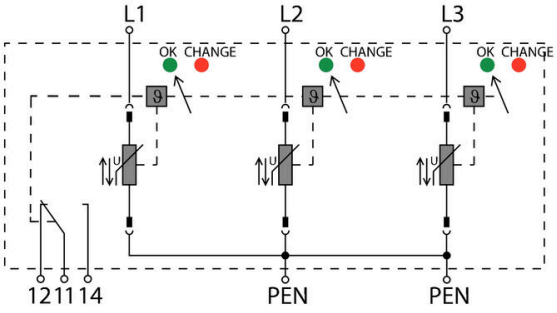

Schematic circuit diagram

Weidmüller Interface GmbH & Co. KG
Klingenbergstraße 26
D-32758 Detmold
Germany

www.weidmueller.com

Accessories

Crosshead screwdriver Phillips

VDE insulated crosshead screwdriver, for Phillips screws, SDIK PH DIN 7438, ISO 8764/2-PH, output to ISO 8764-PH, SoftFinish grip

General ordering data

Type	SDIK PH1 X 80	Version
Order No.	2749890000	Screwdriver, Blade width (B): 1 mm, 80 mm, Blade thickness (A): 1
GTIN (EAN)	4050118897098	
Qty.	1 ST	

Slotted screwdriver

VDE insulated slot-head screwdriver, SDI DIN 7437, ISO 2380/2, drive output acc. to DIN 5264, ISO 2380/1. SoftFinish grip

General ordering data

Type	SDIS 1.0X5.5X125	Version
Order No.	2749850000	Screwdriver, Blade width (B): 5.5 mm, Blade length: 125 mm, Blade
GTIN (EAN)	4050118897050	thickness (A): 1 mm
Qty.	1 ST	

Blank

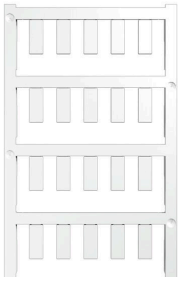

ESG is the tried-and-tested marker in MultiCard format for use on many well-known electrical devices. The result is high-quality device marking with a high-contrast appearance.
Various types are available for devices from manufacturers like Siemens, ABB, Beckhoff etc.
Advantages at a glance:

- Tags for universal usage, self-adhesive or clip-on tags, depending on type
- For aligned equipment, e.g. circuit breakers, we supply ESG markers for clipping onto tag rails
- Individual laser-quality printing according to specifications

For custom printing: Please send us a file of our labeling software M-Print PRO or M-Print PRO Online (without installation) for your labeling specifications.

VPU AC I 3 R 300/12.5 LH

Weidmüller Interface GmbH & Co. KG
Klingenbergstraße 26
D-32758 Detmold
Germany

www.weidmueller.com

Accessories

General ordering data

Type	ESG 6/15 K MC NE WS	Version
Order No.	1880100000	ESG, Device markers x 15 mm, PA 66, Colour: white, Self-adhesive
GTIN (EAN)	4032248478781	
Qty.	200 ST	

VPU Series

Extensive accessories round off the product range

General ordering data

Type	VPU AC EXTENDER	Version
Order No.	3123500000	
GTIN (EAN)	4099987270175	
Qty.	8 ST	

Spare arrester

In the event of a defective arrester, you can easily reorder this spare arrester, replace the defective arrester and thus restore protection.

General ordering data

Type	VPU AC I 0 300/12.5 LH	Version
Order No.	2983620000	, Surge protection
GTIN (EAN)	4099986839748	
Qty.	1 ST	

VPU AC I 3 R 300/12.5 LH

Weidmüller Interface GmbH & Co. KG
Klingenbergstraße 26
D-32758 Detmold
Germany

www.weidmueller.com

Accessories

VPU Series

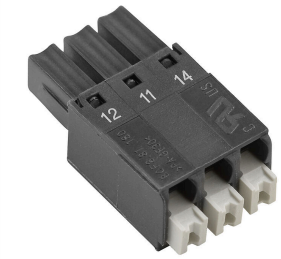

Extensive accessories round off the product range

General ordering data

Type	VPU LOCKING CLIP S	Version
Order No.	2735080000	
GTIN (EAN)	4050118826050	
Qty.	10 ST	
Type	PLUG VPU AC	Version
Order No.	2855300000	
GTIN (EAN)	4064675533283	
Qty.	10 ST	