Data sheet

SAISWC-M-5B-4/9-M12-CG

Weidmüller Interface GmbH & Co. KG
Klingenbergstraße 26
D-32758 Detmold
Germany

www.weidmueller.com



Individual cable lengths are often required nowadays. In order to meet these demands, Weidmüller offers a wide range of plug-in connectors for custom assembly.
Male plugs and female socket for customisable assembly for M8, M12, M16 and 7/8" connections which are highly robust and ideally suited to machine engineering, for instance. The M12 plug-in connectors offer a choice of 5 different connection systems.
The crimp connection is characterised by high functional reliability. With this connection technology, the conductor is crimped to the contact and then engaged in the contact carrier. The connection between the conductor and crimp is vibration-resistant and boasts long-term stability.
Crimp contacts are to be ordered separately.

General ordering data

Version	Field attachable connector, M12
Order No.	2968400000
Type	SAISWC-M-5B-4/9-M12-CG
GTIN (EAN)	4099986781016
Qty.	1 items

Data sheet

SAISWC-M-5B-4/9-M12-CG

Weidmüller Interface GmbH & Co. KG
Klingenbergstraße 26
D-32758 Detmold
Germany

www.weidmueller.com

Technical data

Dimensions and weights

Diameter	14 mm	Net weight	35 g

Environmental Product Compliance

RoHS Compliance Status	Compliant with exemption
RoHS Exemption (if applicable/known)	6c
REACH SVHC	Lead 7439-92-1
SCIP	d9f8df28-a704-45a9-a1cb-1fe1442b5ef0

Technical data customisable plug-in connectors

Number of poles	5	Coding	B-coded
Contact surface	Gold-plated	LED	No
Type of connection	Crimp connection	Housing main material	Cu alloy Ni plated
Cable diameter, max.	9 mm	Cable diameter, min.	4 mm
Conductor cross-section, max.	0.82 mm²	Conductor cross-section, min.	0.08 mm²
Nominal voltage	50 V	Nominal current	4 A
Protection degree	IP67, when screwed in	Plugging cycles	≥ 250
Pollution severity	3	Gender of contact	Male
Shield connection	Yes	Threaded ring material	Brass, nickel-plated
Temperature range of housing	-40 … +85 ° C		

General Info

Number of poles	5	Connection 1	M12
Connection 2	Crimp	UL 94 flammability rating	V-0
Housing main material	Cu alloy Ni plated	Connection thread	M12
Contact surface	Gold-plated	Wire connection cross section, finely stranded, min.	0.08 mm²
Wire connection cross-section, finely stranded, max.	0.82 mm²	Protection degree	IP67, when screwed in
Plugging cycles	≥ 250		

Standards

Connector standard	IEC 61076-2-101	Fire safety for railway vehicles	EN 45545 HL3
Shock and vibration proof according to	EN 50155:2001, DIN EN 61373		

Classifications

ETIM 8.0	EC002635	ETIM 9.0	EC002635
ETIM 10.0	EC002635	ECLASS 14.0	27-44-01-16
ECLASS 15.0	27-44-01-16		

SAISWC-M-5B-4/9-M12-CG

Weidmüller Interface GmbH & Co. KG
Klingenbergstraße 26
D-32758 Detmold
Germany

www.weidmueller.com

Drawings

Dimensioned drawing

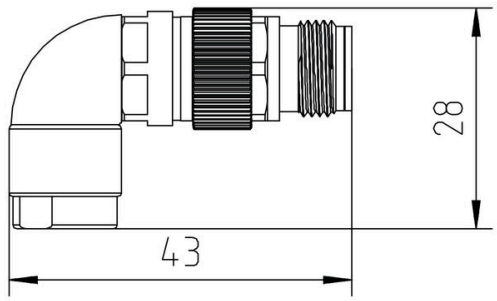

Dimensioned drawing

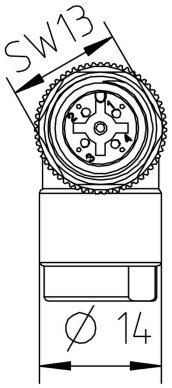

Pole scheme

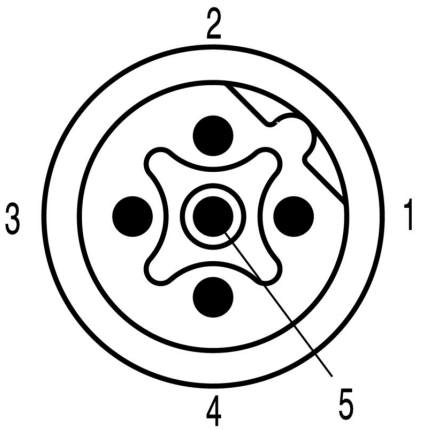

Derating curve

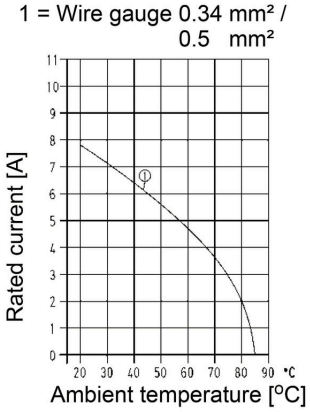

SAISWC-M-5B-4/9-M12-CG

Weidmüller Interface GmbH & Co. KG
Klingenbergstraße 26
D-32758 Detmold
Germany

www.weidmueller.com

Accessories

Shield cable gland



Individual cable lengths are often required nowadays. In order to meet these demands, Weidmüller offers a wide range of plug-in connectors for custom assembly.
Male plugs and female socket for customisable assembly for M8, M12, M16 and 7/8" connections which are highly robust and ideally suited to machine engineering, for instance. The M12 plug-in connectors offer a choice of 5 different connection systems.
The crimp connection is characterised by high functional reliability. With this connection technology, the conductor is crimped to the contact and then engaged in the contact carrier. The connection between the conductor and crimp is vibration-resistant and boasts long-term stability.
Crimp contacts are to be ordered separately.

General ordering data

Type	SAI-M12-KBC-18/20	Version
Order No.	2664860000	Contact
GTIN (EAN)	4050118755206	
Qty.	100 ST	
Type	SAI-M12-KBC-20/22	Version
Order No.	2664870000	Contact
GTIN (EAN)	4050118755213	
Qty.	100 ST	
Type	SAI-M12-KBC-22/24	Version
Order No.	2673730000	Contact
GTIN (EAN)	4050118754599	
Qty.	100 ST	
Type	SAI-M12-KBC-26/28	Version
Order No.	2673740000	Contact
GTIN (EAN)	4050118755084	
Qty.	100 ST	

...for M12



Weidmüller offers a wide range of tools and accessories for sensor-actuator cabling.

General ordering data

Type	SAI-TMCSK	Version
Order No.	1381690000	Pressing tool, 4-indent crimp
GTIN (EAN)	4050118183870	
Qty.	1 ST	