Data sheet

SAIL-M12BW-5S5.0LBSN0.5

Weidmüller Interface GmbH & Co. KG
Klingenbergstraße 26
D-32758 Detmold
Germany

www.weidmueller.com



General ordering data

Version	Sensor/actuator line, One end without connector, M12, Number of poles : 5, 5 m, Socket, angled, Shielded: Yes, LED: No, Sheath material: Polyolefine, molecularly interlinked, Halogen: No, halogen-free, according to IEC 60754
Order No.	2957530500
Type	SAIL-M12BW-5S5.0LBSN0.5
GTIN (EAN)	4099987864268
Qty.	1 items

SAIL-M12BW-5S5.0LBSN0.5

Weidmüller Interface GmbH & Co. KG
Klingenbergstraße 26
D-32758 Detmold
Germany

www.weidmueller.com

Technical data

Approvals

ROHS	Conform

Dimensions and weights

Net weight	352 g

Environmental Product Compliance

RoHS Compliance Status	Compliant with exemption
RoHS Exemption (if applicable/known)	6c
REACH SVHC	Lead 7439-92-1
SCIP	1c533b66-fcff-4da5-b89f-fd55fbf5cb55

Technical specifications for cable

Cable length	5 m	Sheathing colour	black
Resistance to oils	in accordance with IEC 60811:404	Suitable for cable carriers	No
Core cross-section	0.5 mm²	Number of wires	5
Shielded	Yes	Halogen	No, halogen-free, according to IEC 60754
Insulation	Polyolefin	Resistance to spread of flame	According to EN 45545, HL1 - HL3, According to NFPA 130
Sheath material	Polyolefine, molecularly interlinked	Cable length configurable	No
Type is hybrid cable	No	Irradiation crosslinked	Yes
Torsion resistance	360 °/m	Temperature range, stationary	-40...125 °C
Resistant to welding beads	No	Number of poles	5

General technical data

Coding	A-coded	Connection thread	M12
Contact surface	Gold-plated	LED	No
Version	Socket, angled	Housing main material	PUR
Contact material	CuZn35PB2	Nominal voltage	60 V
Nominal current	4 A	Protection degree	IP65, IP66, IP67, IP68, when screwed in
Threaded ring material	Brass, nickel-plated	Temperature range of housing	-25...+80 °C

Standards

Connector standard	IEC 61076-2-101

Plug, left

Plug left	M12, A-coded, Number of poles: 5, female contact, angled 0°, plug, shielded

Plug, right

Plug right	Free conductor end

SAIL-M12BW-5S5.0LBSN0.5

Weidmüller Interface GmbH & Co. KG
Klingenbergstraße 26
D-32758 Detmold
Germany

www.weidmueller.com

Technical data

Classifications

ETIM 8.0	EC001855	ETIM 9.0	EC001855
ETIM 10.0	EC001855	ECLASS 14.0	27-06-03-11
ECLASS 15.0	27-06-03-11		

SAIL-M12BW-5S5.0LBSN0.5

Weidmüller Interface GmbH & Co. KG
Klingenbergstraße 26
D-32758 Detmold
Germany

www.weidmueller.com

Drawings

Dimensioned drawing

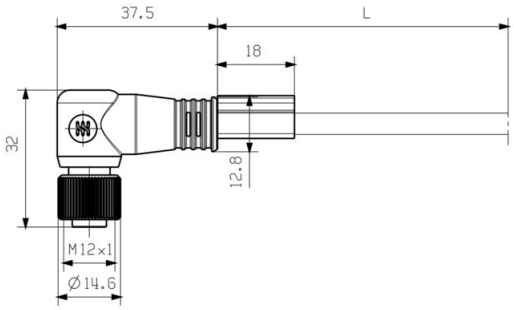

Pole scheme

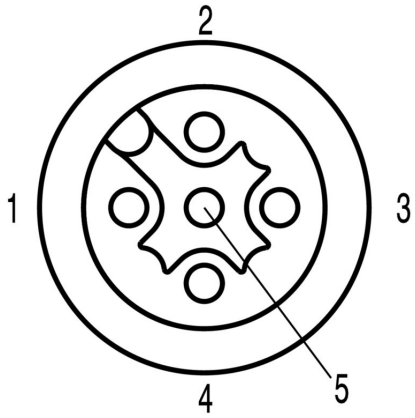

Wiring diagram

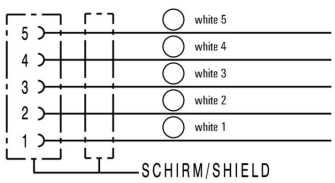

SAIL-M12BW-5S5.0LBSN0.5

Weidmüller Interface GmbH & Co. KG
Klingenbergstraße 26
D-32758 Detmold
Germany

www.weidmueller.com

Drawings

The ideal tool: Screwty ® with torque function



Light, securely screwed-in round plug-in connectors. Screwty set DM / VPE: 1 / Order No.: 1920000000 Adapters: M12, M12 F, M8, M8 F

SAIL-M12BW-5S5.0LBSN0.5

Weidmüller Interface GmbH & Co. KG
Klingenbergstraße 26
D-32758 Detmold
Germany

www.weidmueller.com

Accessories

Cutting tools



Cutting tools for conductors up to 8 mm, 12 mm, 14 mm and 22 mm outside diameter. The special blade geometry allows pinch-free cutting of copper and aluminium conductors with minimum physical effort. The cutting tools (KT 8 to KT 22) also come with VDE and GS-tested protective insulation up to 1,000 V in accordance with EN/IEC 60900.

General ordering data

Type	KT 8	Version
Order No.	9002650000	Cutting tools, Cutting tool for one-hand operation
GTIN (EAN)	4008190020163	
Qty.	1 ST	

Tools



Sheathing stripper for PVC cables

General ordering data

Type	AM 12	Version
Order No.	9030060000	Tools, Sheathing strippers
GTIN (EAN)	4008190337827	
Qty.	1 ST	

Screwty® cable gland tool with torque function



The ideal tool for any application
Screwty® is the ideal, all-purpose tool for tightening all common sensor and actuator cables. Even difficult-to-reach round plugs are accessible using the Screwty®. A simple turning movement tightens and loosens the connectors without the need for excessive force. The Screwty® is a unique and global solution since it fits with most cables and plugs from other vendors (over 90 %). The Screwty® consists of a handle with a conventional 1/4" adapter. Thus it can be used for all sizes: for M12 and M8 round plug-in connectors, and for M12F and M8F customisable plugs and sockets, as well as for all M23 plugs and sockets.

SAIL-M12BW-5S5.0LBSN0.5

Weidmüller Interface GmbH & Co. KG
Klingenbergstraße 26
D-32758 Detmold
Germany

www.weidmueller.com

Accessories

General ordering data

Type	SCREWTY-M12-DM	Version
Order No.	1900001000	Cable gland tool for moulded M12 lines
GTIN (EAN)	4032248436408	
Qty.	1 ST	

Type	SAI-SCREWTY BOX	Version
Order No.	1939180000	Bolting tool
GTIN (EAN)	4032248615506	
Qty.	1 ST	

Tools



- Stripping tools with automatic self-adjustment
- For flexible and solid conductors
- Ideally suitable for mechanical and plant engineering, railway and rail traffic, wind energy, robot technology, explosion protection as well as marine, offshore and ship building sectors
- Stripping length adjustable via end stop
- Automatic opening of clamping jaws after stripping
- No fanning-out of individual conductors
- Adjustable to diverse insulation thicknesses
- Double-insulated cables in two process steps without special adjustment
- No play in self-adjusting cutting unit
- Long service life
- Optimised ergonomic design

General ordering data

Type	STRIPPER 6-16 RED-LINE	Version
Order No.	9203110000	Stripping and cutting tool
GTIN (EAN)	4032248541423	
Qty.	1 ST	

SAIL-M12BW-5S5.0LBSN0.5

Weidmüller Interface GmbH & Co. KG
Klingenbergstraße 26
D-32758 Detmold
Germany

www.weidmueller.com

Accessories

Blank

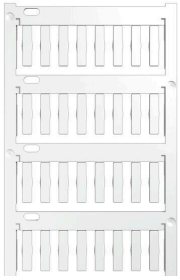

TM-I is an acknowledged and accredited marker type for traffic engineering applications. There are various different tag lengths available for individual labelling with long character strings. Easy handling of separation and installation thanks to the project marker field. Pre-attachment of sleeves and retrofitting of tags offer excellent versatility
The special contour of TM-I allows easy assembly and secures firm positioning. They are compatible with a number of commercially available sleeves. Thanks to the MultiCard format, the tags can be printed quickly and conveniently with the PrintJet CONNECT, plotter or the STI pen.

- Easy handling of separation and installation thanks to the project marker field.
- Acknowledged and accredited marker for traffic engineering applications
- Pre-attachment of sleeves and retrofitting of tags offer excellent versatility
- Not suited for labelling with P-Ink or STI pen in connection with CLI T sleeves

For custom printing: Please send us a file of our labeling software M-Print PRO or M-Print PRO Online (without installation) for your labeling specifications.

General ordering data

Type	TM-I 18 MC NE WS	Version
Order No.	1718431044	TM-I, Insert markers, 1.5 - 22 mm, 18 x 4 mm, white
GTIN (EAN)	4008190349011	
Qty.	320 ST	
Type	TM-I 18 MC NE GE	Version
Order No.	1718431687	TM-I, Insert markers, 1.5 - 22 mm, 18 x 4 mm, yellow
GTIN (EAN)	4008190349028	
Qty.	320 ST	