Data sheet

WIL-LRGBW-RXSS-XXXX-X365SX-M12X-X0

Weidmüller Interface GmbH & Co. KG
Klingenbergstraße 26
D-32758 Detmold
Germany

www.weidmueller.com

Our L-series, as standard and premium variants, is the ideal surface mounted light for the industrial field. The swiveling mounting brackets allow for easy and direct mounting and positioning of the illumination field. With only one power supply, it is possible to connect several lights in series. Simple connection technology with circular connectors enables plug-and-play. A special safety glass protects against industrial influences and at the same time provides homogeneous illumination in the light color 5.700K.

General ordering data

Order No.	2899530000
Type	WIL-LRGBW-RXSS-XXXX-X365SX-M12X-X0
GTIN (EAN)	4064675906582
Qty.	1 items

WIL-LRGBW-RXSS-XXXX-X365SX-M12X-X0

Weidmüller Interface GmbH & Co. KG
Klingenbergstraße 26
D-32758 Detmold
Germany

www.weidmueller.com

Technical data

Approvals

Approvals	
ROHS	Conform
UL File Number Search	UL Website
Certificate No. (cURus)	E354496

Dimensions and weights

Depth	40 mm	Depth (inches)	1.5748 inch
Height	42 mm	Height (inches)	1.6535 inch
Width	365 mm	Width (inches)	14.3701 inch
Net weight	490 g		

Temperatures

Operating temperature	-20 - 45°C

Environmental Product Compliance

RoHS Compliance Status	Compliant with exemption
RoHS Exemption (if applicable/known)	6c
REACH SVHC	Lead 7439-92-1
SCIP	b1b97d04-507a-4265-bbfb-4e884ff5d5a9

Cable technical specifications

Housing main material	hard anodised aluminium

Connection data

LED Modul is attachable	no	Version	pin, straight
Number of poles	5	Coding	A-coded
Connection thread	M12	Wiring	Pin 1 - 4: control multicolor LED, Pin 5: GND(-)

Electric data

Rated voltage	24 V DC	Power	20.5 W

General technical data

Type of connection	Pin connector	Electronic equipment on rolling stock	No
Light colour (CCT)	Red, Green, Blue, White	Emitting angle	100 °
Illumination level	196 lux	Operating life	60.000 h
Type of mounting	Screw mounting	Drill hole spacing	395 mm
Protection degree	IP67	Efficiency class (according to EU Directive No. 874/2012)	Not required

Material data

Material of LED cover	PMMA	Housing main material	hard anodised aluminium

WIL-LRGBW-RXSS-XXXX-X365SX-M12X-X0

Weidmüller Interface GmbH & Co. KG
Klingenbergstraße 26
D-32758 Detmold
Germany

www.weidmueller.com

Technical data

Classifications

ETIM 8.0	EC000996	ETIM 9.0	EC000996
ETIM 10.0	EC000996	ECLASS 14.0	27-11-06-35
ECLASS 15.0	27-11-06-35		

WIL-LRGBW-RXSS-XXXX-X365SX-M12X-X0

Weidmüller Interface GmbH & Co. KG
Klingenbergstraße 26
D-32758 Detmold
Germany

www.weidmueller.com

Drawings

Dimensioned drawing

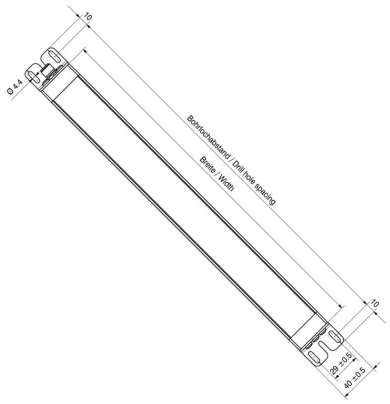

Pole scheme

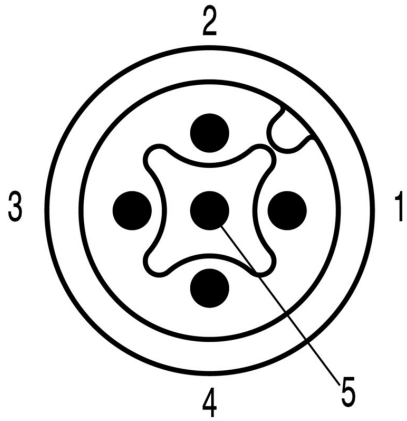

WIL-LRGBW-RXSS-XXXX-X365SX-M12X-X0

Weidmüller Interface GmbH & Co. KG
Klingenbergstraße 26
D-32758 Detmold
Germany

www.weidmueller.com

Accessories

Screw terminal connector

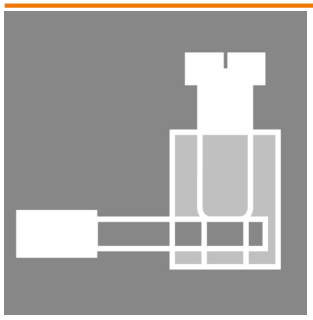

Individual cable lengths are often required nowadays. In order to meet these demands, Weidmüller offers a wide range of plug-in connectors for custom assembly.
Male plugs and female socket for customisable assembly for M8, M12, M16 and 7/8" connections which are highly robust and ideally suited to machine engineering, for instance. The M12 plug-in connectors offer a choice of 5 different connection systems.
The screw connection can be used in a wide range of applications. With this technology the conductor, optionally with wire-end ferrules, can be plugged into connection elements and secured with a screw. It is the classic, cheapest form of connection technology that also supports multi-conductor connections.

General ordering data

Type	SAIBGS-P-5A-4/6-M12	Version
Order No.	9457250000	Field attachable connector, M12
GTIN (EAN)	4032248155774	
Qty.	1 ST	

PUR halogen-free black (U)

Sensor/actuator cables are used for wiring sensors and actuators and for transmitting data or power in various applications. The moulded cable offers connected and tested connection of the plug-in connector to the cable ex-works. The cables may be exposed to a wide range of conditions, such as humidity, dust, heat, cold, shock or vibration.
Our developers have focused specifically on this issue and designed a host of different M8 and M12 sensor-actuator cables so you are bound to find the solution you need for your application.
Is there something you have not managed to find or you feel needs explanation? Talk to us!

General ordering data

Type	SAIL-M12BG-5-1.5U	Version
Order No.	9457910150	Sensor/actuator line, One end without connector, M12, Number
GTIN (EAN)	4032248528875	of poles : 5, 1.5 m, Female socket, straight, Shielded: No, LED: No,
Qty.	1 ST	Sheath material: PUR, Halogen: No
Type	SAIL-M12BG-5-3.0U	Version
Order No.	9457910300	Sensor/actuator line, One end without connector, M12, Number of
GTIN (EAN)	4032248228843	poles : 5, 3 m, Female socket, straight, Shielded: No, LED: No, Sheath
Qty.	1 ST	material: PUR, Halogen: No
Type	SAIL-M12BG-5-5.0U	Version
Order No.	9457910500	Sensor/actuator line, One end without connector, M12, Number of
GTIN (EAN)	4032248228850	poles : 5, 5 m, Female socket, straight, Shielded: No, LED: No, Sheath
Qty.	1 ST	material: PUR, Halogen: No
Type	SAIL-M12BG-5-10U	Version
Order No.	9457911000	Sensor/actuator line, One end without connector, M12, Number
GTIN (EAN)	4032248228867	of poles : 5, 10 m, Female socket, straight, Shielded: No, LED: No,
Qty.	1 ST	Sheath material: PUR, Halogen: No

WIL-LRGBW-RXSS-XXXX-X365SX-M12X-X0

Weidmüller Interface GmbH & Co. KG
Klingenbergstraße 26
D-32758 Detmold
Germany

www.weidmueller.com

Accessories

Type	SAIL-M12GM12G-5-1.0U	Version
Order No.	9457340100	Sensor/actuator line, Connecting line, M12 / M12, Number of poles :
GTIN (EAN)	4032248832583	5, 1 m, pin, straight - socket, straight, Shielded: No, LED: No, Sheath
Qty.	1 ST	material: PUR, Halogen: No
Type	SAIL-M12GM12G-5-2.0U	Version
Order No.	9457340200	Sensor/actuator line, Connecting line, M12 / M12, Number of poles :
GTIN (EAN)	4008190311285	5, 2 m, pin, straight - socket, straight, Shielded: No, LED: No, Sheath
Qty.	1 ST	material: PUR, Halogen: No
Type	SAIL-M12GM12G-5-3.0U	Version
Order No.	9457340300	Sensor/actuator line, Connecting line, M12 / M12, Number of poles :
GTIN (EAN)	4008190311896	5, 3 m, pin, straight - socket, straight, Shielded: No, LED: No, Sheath
Qty.	1 ST	material: PUR, Halogen: No