Data sheet

FP PRO TOP3 24/10 3M

Weidmüller Interface GmbH & Co. KG
Klingenbergstraße 26
D-32758 Detmold
Germany

www.weidmueller.com

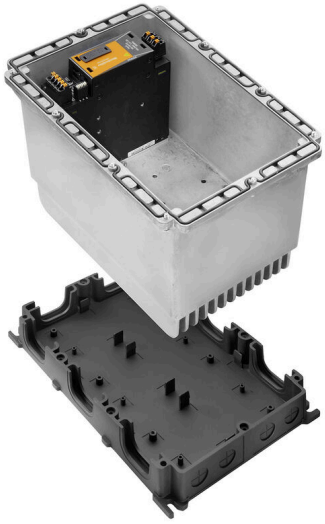

PROtop power supplies offer a wide range of functions with many advantages.
These include high energy efficiency, outstanding power reserves, high reliability and optional communication capability. PROtop also supports direct parallel connection with load balancing. With the possibility of integrating our PROtop power supplies into the FieldPower® system, the entire range of functions becomes available in the field – with all the advantages of the FieldPower® modular system.

General ordering data

Version	FieldPower® power supply unit, IP65, in closed state, in complete state, 10A, 24 V, DC, PUSH IN
Order No.	2887590000
Type	FP PRO TOP3 24/10 3M
GTIN (EAN)	4064675859840
Qty.	1 items

Data sheet

FP PRO TOP3 24/10 3M

Weidmüller Interface GmbH & Co. KG
Klingenbergstraße 26
D-32758 Detmold
Germany

www.weidmueller.com

Technical data

Approvals

ROHS	Conform

Dimensions and weights

Depth	220 mm	Depth (inches)	8.6614 inch
Height	196 mm	Height (inches)	7.7165 inch
Width	196 mm	Width (inches)	7.7165 inch
Net weight	4869 g		

Temperatures

Storage temperature	-40 °C...85 °C	Operating temperature	-25 °C...50 °C
Operating temperature range	-25...50 °C	Start-up	≥ -40 °C
Humidity	35...85%, non condensing and non freezing		

Environmental Product Compliance

RoHS Compliance Status	Compliant with exemption
RoHS Exemption (if applicable/known)	6c
REACH SVHC	Lead 7439-92-1, Potassium perfluorobutane sulfonate 29420-49-3
SCIP	7645f3b1-6db9-495d-9e21-ab1d894aff05

Input

AC input voltage range	3 x 320...3 x 575 V AC / 2 x 360...2 x 575 V AC	Recommended back-up fuse	2 - 3 A, Char. C
Frequency range AC	45...65 Hz	Type of connection	PUSH IN
Wire connection method	PUSH IN	Surge protection	Varistor
Input fuse (internal)	No	AC current consumption	0,7 A @ 400 V DC / 0,8 A @ 320 V AC
DC input voltage range	450...800 V DC (max. 500 V DC acc. to UL508)	Inrush current	Max. 10 A

Output

Output power	480 W	Rated output voltage	24 V DC ± 1 %
Output voltage, max.	28.8 V	Output voltage, min.	22.5 V
Output current, max.	10 A	Wire connection method	PUSH IN
Surge protection	Varistor	Output voltage type	DC
Output voltage, note	(adjustable via potentiometer)	Nominal output current for Unom	10 A @ 60 °C
Switch-on delay	1 s	Output current	10A
Rated current adjustable	No	Output voltage	24 V
Triggering characteristic	see characteristic curve		

General data

Installation advice	Lid screws included	Humidity	35...85%, non condensing and non freezing
Protection degree	IP65, in closed state, in complete state	Surge voltage category	III, II
Short-circuit protection	Yes, internal		

FP PRO TOP3 24/10 3M

Weidmüller Interface GmbH & Co. KG
Klingenbergstraße 26
D-32758 Detmold
Germany

www.weidmueller.com

Technical data

Insulation coordination

Surge voltage category	III, II

Input

AC input voltage range	3 x 320...3 x 575 V AC / 2 x 360...2 x 575 V AC	Recommended back-up fuse	2 - 3 A, Char. C
Frequency range AC	45...65 Hz	Surge protection	Varistor
AC current consumption	0,7 A @ 400 V DC / 0,8 A @ 320 V AC	DC input voltage range	450...800 V DC (max. 500 V DC acc. to UL508)
Inrush current	Max. 10 A	Input fuse (internal)	No

Output

Output power	480 W	Output voltage, max.	28.8 V
Output voltage, min.	22.5 V	Output voltage type	DC
Output voltage, note	(adjustable via potentiometer)	Switch-on delay	1 s
Output current	10A	Rated current adjustable	No
Output voltage	24 V	Triggering characteristic	see characteristic curve
Rated output voltage	24 V DC ± 1 %	Nominal output current for Unom	10 A @ 60 °C

Classifications

ETIM 8.0	EC002540	ETIM 9.0	EC002540
ETIM 10.0	EC002540	ECLASS 14.0	27-04-07-01
ECLASS 15.0	27-04-07-01		

FP PRO TOP3 24/10 3M

Weidmüller Interface GmbH & Co. KG
Klingenbergstraße 26
D-32758 Detmold
Germany

www.weidmueller.com

Drawings

