Data sheet

RSS110024T

Weidmüller Interface GmbH & Co. KG
Klingenbergstraße 26
D-32758 Detmold
Germany

www.weidmueller.com

General ordering data

Version	TERMSERIES, Relay, Number of contacts: 1, CO contact AgSnO, Rated control voltage: 24 V DC, Continuous current: 6 A, Plug-in connection, Test button available: Yes
Order No.	2851610000
Type	RSS110024T
GTIN (EAN)	4064675469964
Qty.	20 items

Data sheet

RSS110024T

Weidmüller Interface GmbH & Co. KG
Klingenbergstraße 26
D-32758 Detmold
Germany

www.weidmueller.com

Technical data

Approvals

Approvals	
ROHS	Conform
UL File Number Search	UL Website
Certificate No. (cURus)	E522350

Dimensions and weights

Depth	16 mm	Depth (inches)	0.6299 inch
Height	28 mm	Height (inches)	1.1024 inch
Width	5 mm	Width (inches)	0.1968 inch
Net weight	5.72 g		

Temperatures

Storage temperature	-40 °C...85 °C	Ambient temperature	-40 °C...85 °C
Operating temperature		Humidity	5-85% relative humidity, Tu = 40°C, without condensation

Environmental Product Compliance

RoHS Compliance Status	Compliant without exemption
REACH SVHC	No SVHC above 0.1 wt%

Rated data UL

Certificate No. (cURus)	E522350

Control side

Rated control voltage	24 V DC	Rated current DC	7.1 mA
Power rating	170 mW	Coil resistance	3390 Ω ± 10 %
Status indicator	No		

Load side

Rated switching voltage	250 V AC	Max. switching frequency at rated load	0.1 Hz
Max. switching voltage, AC	250 V	Max. switching voltage, DC	250 V
Inrush current	30 A / 20 ms	AC switching capacity (resistive), max.	1500 VA
DC switching capacity (resistive), max.	144 W @ 24 V	Switch-on delay	<13 ms
Switch-off delay	approx. 5 ms	Contact type	1 CO contact (AgSnO)
Mechanical service life	10 x 106 switching cycles	Min. switching power	100 mA @ 12 V

General data

Operating altitude	≤ 2000 m, above sea level	Test button available	Yes
Version of test button	lockable	Mechanical switch position indicator	No
Colour	white		

Weidmüller Interface GmbH & Co. KG
Klingenbergstraße 26
D-32758 Detmold
Germany

www.weidmueller.com

Technical data

Insulation coordination

Clearance and creepage distances for control side - load side	≥ 6 mm	Dielectric strength for control side - load side	4 kVeff / 1 Min.
Dielectric strength of open contact	1 kVeff / 1 min		

Further details of approvals / standards

Certificate No. (VDE)	40054910	Certificate No. (cURus)	E522350

Connection data

Wire connection method	Plug-in connection

Classifications

ETIM 8.0	EC001437	ETIM 9.0	EC001437
ETIM 10.0	EC001437	ECLASS 14.0	27-37-16-01
ECLASS 15.0	27-37-16-01		

Weidmüller Interface GmbH & Co. KG
Klingenbergstraße 26
D-32758 Detmold
Germany

www.weidmueller.com

Drawings

Wiring diagram

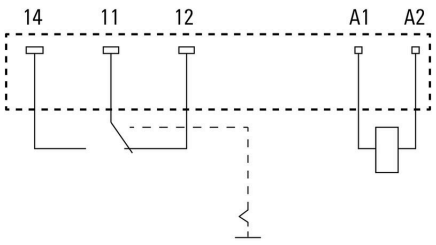

Graph

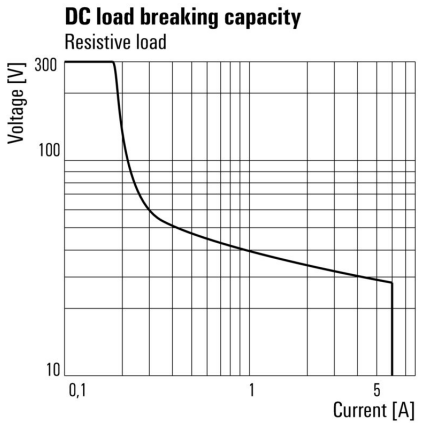

Graph

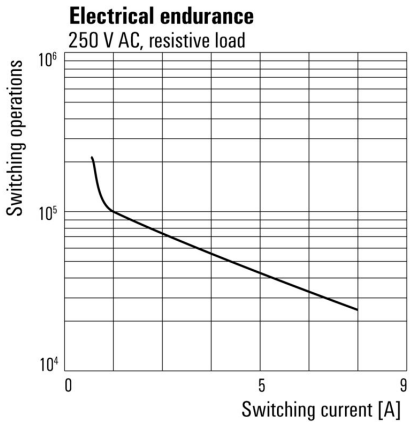

Dimensional drawing

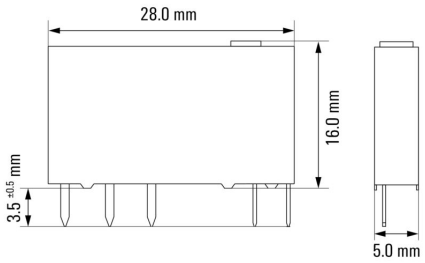

Miscellaneous

Recommended screwdriver for test button

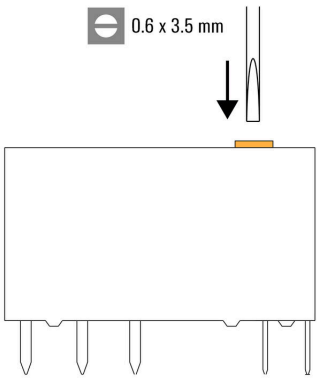

Miscellaneous

Function of test button

Mode is selected by rotating the orange switch.
The test button can be rotated endlessly.
The groove on the top shows the selected mode.

View from the top:

Auto Mode:
Relay contact is controlled by the coil.

Manual ON:
Relay is manually switch on without applied coil voltage.
- NO contact is closed

Weidmüller Interface GmbH & Co. KG
Klingenbergstraße 26
D-32758 Detmold
Germany

www.weidmueller.com

Drawings

Type code electromechanical relay (TERMSERIES)

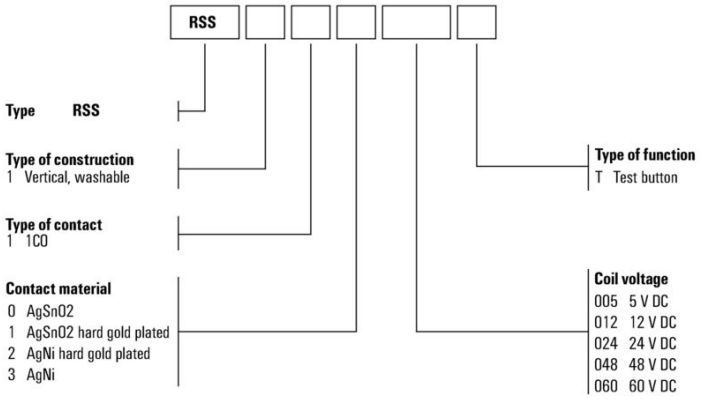

Weidmüller Interface GmbH & Co. KG
Klingenbergstraße 26
D-32758 Detmold
Germany

www.weidmueller.com

Accessories

Screw connection

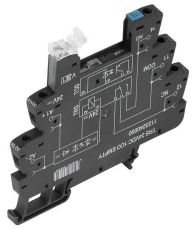

TERMSERIES empty sockets with:
- 1 CO contact
- Unique multi-voltage input from 24 to 230 V UC
- Input voltages with coloured marking: DC: blue, UC: white
- Due to high-quality design and no sharp edges no risk of injuries during installation
- Partition plates for optical separation and reinforcement of insulation

General ordering data

Type	TRS 24VDC 1CO EMPTY	Version
Order No.	1123240000	TERMSERIES, Relay socket, Number of contacts: 1, CO contact, Rated
GTIN (EAN)	4032248905485	control voltage: 24 V DC ±20 %, Continuous current: 10 A, Screw
Qty.	10 ST	connection

PUSH IN connection

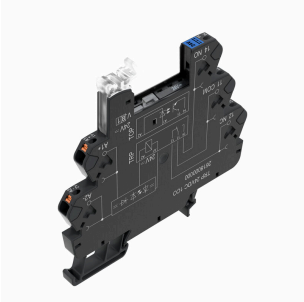

TERMSERIES empty sockets with:
- 1 CO contact
- Unique multi-voltage input from 24 to 230 V UC
- Input voltages with coloured marking: DC: blue, UC: white
- Due to high-quality design and no sharp edges no risk of injuries during installation
- Partition plates for optical separation and reinforcement of insulation

General ordering data

Type	TRP 24VDC 1CO EMPTY	Version
Order No.	2618870000	TERMSERIES, Relay socket, Number of contacts: 1, CO contact, Rated
GTIN (EAN)	4050118669961	control voltage: 24 V DC ±20 %, Continuous current: 10 A, PUSH IN
Qty.	10 ST	

Screw connection

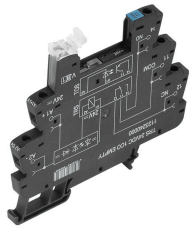

TERMSERIES empty sockets with:
- 1 CO contact
- Unique multi-voltage input from 24 to 230 V UC
- Input voltages with coloured marking: DC: blue, UC: white
- Due to high-quality design and no sharp edges no risk of injuries during installation
- Partition plates for optical separation and reinforcement of insulation

General ordering data

Type	TRS 24VUC 1CO EMPTY	Version
Order No.	1123250000	TERMSERIES, Relay socket, Number of contacts: 1, CO contact, Rated
GTIN (EAN)	4032248905713	control voltage: 24 V UC ±10 %, Continuous current: 10 A, Screw
Qty.	10 ST	connection

Weidmüller Interface GmbH & Co. KG
Klingenbergstraße 26
D-32758 Detmold
Germany

www.weidmueller.com

Accessories

PUSH IN connection

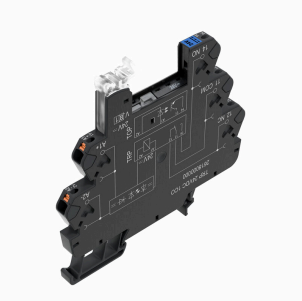

TERMSERIES empty sockets with:
- 1 CO contact
- Unique multi-voltage input from 24 to 230 V UC
- Input voltages with coloured marking: DC: blue, UC: white
- Due to high-quality design and no sharp edges no risk of injuries during installation
- Partition plates for optical separation and reinforcement of insulation

General ordering data

Type	TRP 24VUC 1CO EMPTY	Version
Order No.	2618910000	TERMSERIES, Relay socket, Number of contacts: 1, CO contact, Rated
GTIN (EAN)	4050118669923	control voltage: 24 V UC ±10 %, Continuous current: 10 A, PUSH IN
Qty.	10 ST	

Screw connection

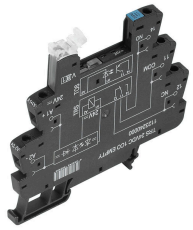

TERMSERIES empty sockets with:
- 1 CO contact
- Unique multi-voltage input from 24 to 230 V UC
- Input voltages with coloured marking: DC: blue, UC: white
- Due to high-quality design and no sharp edges no risk of injuries during installation
- Partition plates for optical separation and reinforcement of insulation

General ordering data

Type	TRS 24-230VUC 1CO EMPTY...	Version
Order No.	2662870000	TERMSERIES, Relay socket, Number of contacts: 1, CO contact, Rated
GTIN (EAN)	4050118698206	control voltage: 24...230 V UC ±10 %, Continuous current: 10 A,
Qty.	10 ST	Screw connection

PUSH IN connection

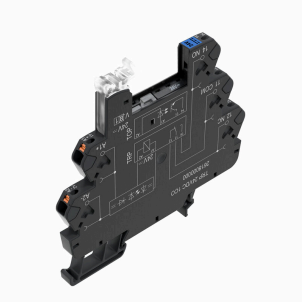

TERMSERIES empty sockets with:
- 1 CO contact
- Unique multi-voltage input from 24 to 230 V UC
- Input voltages with coloured marking: DC: blue, UC: white
- Due to high-quality design and no sharp edges no risk of injuries during installation
- Partition plates for optical separation and reinforcement of insulation

General ordering data

Type	TRP 24-230VUC 1CO EMPTY...	Version
Order No.	2663030000	TERMSERIES, Relay socket, Number of contacts: 1, CO contact, Rated
GTIN (EAN)	4050118698046	control voltage: 24...230 V UC ±10 %, Continuous current: 10 A,
Qty.	10 ST	PUSH IN

Weidmüller Interface GmbH & Co. KG
Klingenbergstraße 26
D-32758 Detmold
Germany

www.weidmueller.com

Counterpart

Screw connection

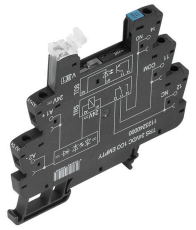

TERMSERIES empty sockets with:
- 1 CO contact
- Unique multi-voltage input from 24 to 230 V UC
- Input voltages with coloured marking: DC: blue, UC: white
- Due to high-quality design and no sharp edges no risk of injuries during installation
- Partition plates for optical separation and reinforcement of insulation

General ordering data

Type	TRS 24VDC 1CO EMPTY	Version
Order No.	1123240000	TERMSERIES, Relay socket, Number of contacts: 1, CO contact, Rated
GTIN (EAN)	4032248905485	control voltage: 24 V DC ±20 %, Continuous current: 10 A, Screw
Qty.	10 ST	connection

PUSH IN connection

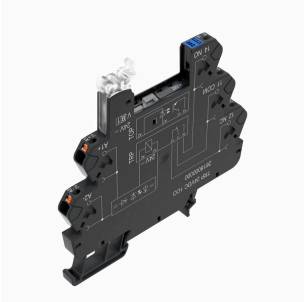

TERMSERIES empty sockets with:
- 1 CO contact
- Unique multi-voltage input from 24 to 230 V UC
- Input voltages with coloured marking: DC: blue, UC: white
- Due to high-quality design and no sharp edges no risk of injuries during installation
- Partition plates for optical separation and reinforcement of insulation

General ordering data

Type	TRP 24VDC 1CO EMPTY	Version
Order No.	2618870000	TERMSERIES, Relay socket, Number of contacts: 1, CO contact, Rated
GTIN (EAN)	4050118669961	control voltage: 24 V DC ±20 %, Continuous current: 10 A, PUSH IN
Qty.	10 ST	

Screw connection

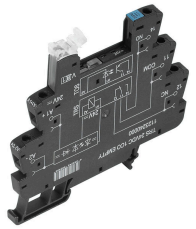

TERMSERIES empty sockets with:
- 1 CO contact
- Unique multi-voltage input from 24 to 230 V UC
- Input voltages with coloured marking: DC: blue, UC: white
- Due to high-quality design and no sharp edges no risk of injuries during installation
- Partition plates for optical separation and reinforcement of insulation

General ordering data

Type	TRS 24VUC 1CO EMPTY	Version
Order No.	1123250000	TERMSERIES, Relay socket, Number of contacts: 1, CO contact, Rated
GTIN (EAN)	4032248905713	control voltage: 24 V UC ±10 %, Continuous current: 10 A, Screw
Qty.	10 ST	connection

Weidmüller Interface GmbH & Co. KG
Klingenbergstraße 26
D-32758 Detmold
Germany

www.weidmueller.com

Counterpart

PUSH IN connection

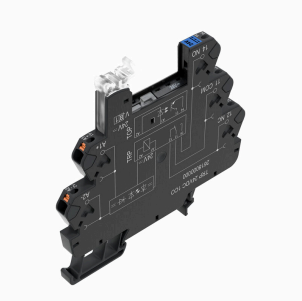

TERMSERIES empty sockets with:
- 1 CO contact
- Unique multi-voltage input from 24 to 230 V UC
- Input voltages with coloured marking: DC: blue, UC: white
- Due to high-quality design and no sharp edges no risk of injuries during installation
- Partition plates for optical separation and reinforcement of insulation

General ordering data

Type	TRP 24VUC 1CO EMPTY	Version
Order No.	2618910000	TERMSERIES, Relay socket, Number of contacts: 1, CO contact, Rated
GTIN (EAN)	4050118669923	control voltage: 24 V UC ±10 %, Continuous current: 10 A, PUSH IN
Qty.	10 ST	

Screw connection

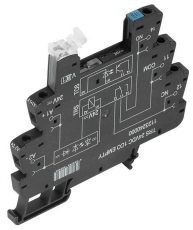

TERMSERIES empty sockets with:
- 1 CO contact
- Unique multi-voltage input from 24 to 230 V UC
- Input voltages with coloured marking: DC: blue, UC: white
- Due to high-quality design and no sharp edges no risk of injuries during installation
- Partition plates for optical separation and reinforcement of insulation

General ordering data

Type	TRS 24-230VUC 1CO EMPTY...	Version
Order No.	2662870000	TERMSERIES, Relay socket, Number of contacts: 1, CO contact, Rated
GTIN (EAN)	4050118698206	control voltage: 24...230 V UC ±10 %, Continuous current: 10 A,
Qty.	10 ST	Screw connection

PUSH IN connection

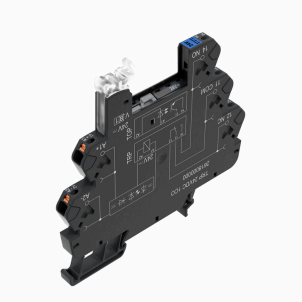

TERMSERIES empty sockets with:
- 1 CO contact
- Unique multi-voltage input from 24 to 230 V UC
- Input voltages with coloured marking: DC: blue, UC: white
- Due to high-quality design and no sharp edges no risk of injuries during installation
- Partition plates for optical separation and reinforcement of insulation

General ordering data

Type	TRP 24-230VUC 1CO EMPTY...	Version
Order No.	2663030000	TERMSERIES, Relay socket, Number of contacts: 1, CO contact, Rated
GTIN (EAN)	4050118698046	control voltage: 24...230 V UC ±10 %, Continuous current: 10 A,
Qty.	10 ST	PUSH IN