Data sheet

VPU AC I 2 R 275/25 LCF MB

Weidmüller Interface GmbH & Co. KG
Klingenbergstraße 26
D-32758 Detmold
Germany

www.weidmueller.com

Type I/II lightning arrester for use upstream of the electrical meter

- With 25 kA (10/350 µs) suitable for protective zones I, II, III and IV (LPL I/II/III/IV)
- With remote monitoring function, one changeover contact
- Tested according to IEC 61643-11 for type I and II surge protection

General ordering data

Version	Surge voltage arrester, Low voltage, Surge protection, Leakage-current-free, with remote contact, Single-phase, TN-S
Order No.	2774950000
Type	VPU AC I 2 R 275/25 LCF MB
GTIN (EAN)	4064675038887
Qty.	1 items

VPU AC I 2 R 275/25 LCF MB

Weidmüller Interface GmbH & Co. KG
Klingenbergstraße 26
D-32758 Detmold
Germany

www.weidmueller.com

Technical data

Approvals

Approvals	CE
ROHS	Conform

Dimensions and weights

Depth	71 mm	Depth (inches)	2.7953 inch
Height	99 mm	Height (inches)	3.8976 inch
Width	70 mm	Width (inches)	2.7559 inch
Net weight	556 g		

Temperatures

Storage temperature	-40 °C...85 °C	Operating temperature	-40 °C...85 °C
Humidity	5 - 95% rel. humidity		

Environmental Product Compliance

RoHS Compliance Status	Compliant without exemption
REACH SVHC	No SVHC above 0.1 wt%

Connection data, remote alert

Cross-section for connected wire, solid core, min.	0.14 mm²	Stripping length	8 mm
Connection type	Screw connection: pluggable	Cross-section for connected wire, solid core, max.	1.5 mm²
Max. torque	0.25 Nm		

General data

Optical function display	green = OK; red = arrester is defective - replace	Segment	Power distribution
Version	Surge protection, Leakage-current-free, with remote contact	Design	Installation housing; 4TE, Insta IP 20
UL 94 flammability rating	V-0	Colour	grey
Protection degree	IP20 in installed state	Mounting rail	TS 35
Operating altitude	≤ 2000 m		

Insulation coordination acc. to EN 50178

Surge voltage category	II	Pollution severity	2

Rated data IEC / EN

Number of poles	2	Leakage current at Un	1 µA
Signalling contact	250 V 1A 1CO	Rated voltage (AC)	230 V
Low voltage network	Single-phase, TN-S	Voltage type	AC
Temporary surge voltage (over-voltage) - TOV	438 V	Response time / fallback time	≤ 25 ns
Frequency range, max.	60 Hz	Frequency range, min.	50 Hz
Standards	IEC 61643-11, EN 61643-11	Lightning test current limp (10/350 µs) (L-PE)	25 kA

VPU AC I 2 R 275/25 LCF MB

Weidmüller Interface GmbH & Co. KG
Klingenbergstraße 26
D-32758 Detmold
Germany

www.weidmueller.com

Technical data

Requirements class, acc. to EN 61643-11	T1, T2	Requirements category acc. to IEC 61643-11	Type I, Type II
Max. continuous voltage, Uc (AC)	275 V	Energy coordination (≤10 m)	Type I, Type II, Type III
Rated load current IL	100 A	Discharge current In (8/20µs) wire-PE	25 kA
Discharge current Imax (8/20µs) wire-PE	100 kA	SPD type	T1, T2
Protection level Up at IN (L/N-PE)	≤ 1.5 kV	Short-circuit current rating ISCCR	50 kA
Follow-on current extinguishing capability Ifi	Not available due for technical reasons	Integrated back-up fuse	No
PE conductor current IPE	1 µA		

Connection data

Stripping length	18 mm	Wire connection method	Screw connection
Type of connection	Screw connection	Stripping length, rated connection	18 mm
Tightening torque, min.	3 Nm	Tightening torque, max.	4.5 Nm
Clamping range, rated connection	16 mm²	Clamping range, min.	1.5 mm²
Clamping range, max.	35 mm²	Wire cross-section, solid, min.	1.5 mm²
Wire cross-section, solid, max.	35 mm²	Wire connection cross section, finely stranded, min.	1.5 mm²
Wire connection cross section, finely stranded, max.	25 mm²	Conductor cross-section, flexible, AEH (DIN 46228-1), min.	1.5 mm²
Conductor cross-section, flexible, AEH (DIN 46228-1), max.	35 mm²	Connection cross-section, stranded, min.	1.5 mm²
Connection cross-section, stranded, max.	35 mm²		

Electrical data

Voltage type	AC

General data

Number of poles	2	Protection degree	IP20 in installed state
Colour	grey		

Guarantee

Time interval	5 years

Classifications

ETIM 8.0	EC001457	ETIM 9.0	EC001457
ETIM 10.0	EC001457	ECLASS 14.0	27-17-12-04
ECLASS 15.0	27-17-12-04		

VPU AC I 2 R 275/25 LCF MB

Weidmüller Interface GmbH & Co. KG
Klingenbergstraße 26
D-32758 Detmold
Germany

www.weidmueller.com

Drawings

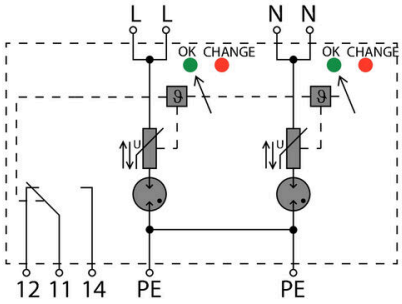

Principle circuit diagram

VPU AC I 2 R 275/25 LCF MB

Weidmüller Interface GmbH & Co. KG
Klingenbergstraße 26
D-32758 Detmold
Germany

www.weidmueller.com

Accessories

Crosshead screwdriver Phillips

VDE insulated crosshead screwdriver, for Phillips screws, SDIK PH DIN 7438, ISO 8764/2-PH, output to ISO 8764-PH, SoftFinish grip

General ordering data

Type	SDIK PH1 X 80	Version
Order No.	2749890000	Screwdriver, Blade width (B): 1 mm, 80 mm, Blade thickness (A): 1
GTIN (EAN)	4050118897098	
Qty.	1 ST	

VPU Series

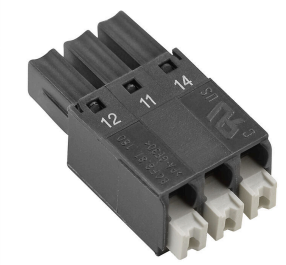

Extensive accessories round off the product range

General ordering data

Type	PLUG VPU AC	Version
Order No.	2855300000	
GTIN (EAN)	4064675533283	
Qty.	10 ST	