Data sheet

TRPL 12-60VUC 1NO

Weidmüller Interface GmbH & Co. KG
Klingenbergstraße 26
D-32758 Detmold
Germany

www.weidmueller.com

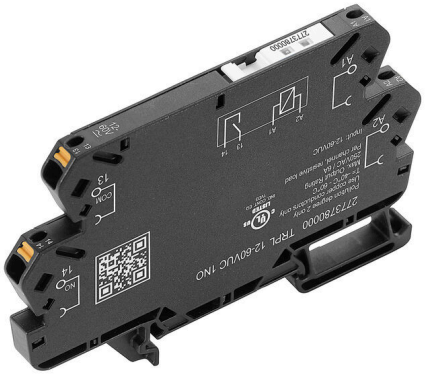

The all-rounder. Compact relay modules, 6 mm width with extensive accessories, maximum vibration resistance, and unlimited cross-connection possibilities.

- 1 NO contacts
- Contact material: AgNi
- Unique multi-voltage input from 12 to 60 V UC and 24 to 230 V UC
- Input voltages from 5 V DC to 230 V UC with coloured marking: AC: red, DC: blue, UC: white

General ordering data

Version	TERMSERIES-compact, Relay module, Number of contacts: 1, 1 NO contacts, NO contact AgNi, Rated control voltage: 12...60 V UC ±10 %, Continuous current: 6 A, PUSH IN, Test button available: No
Order No.	2773780000
Type	TRPL 12-60VUC 1NO
GTIN (EAN)	4064675037552
Qty.	10 items

TRPL 12-60VUC 1NO

Weidmüller Interface GmbH & Co. KG
Klingenbergstraße 26
D-32758 Detmold
Germany

www.weidmueller.com

Technical data

Approvals

Approvals	
ROHS	Conform
UL File Number Search	UL Website
Certificate no. (cULus)	E141197

Dimensions and weights

Depth	62.5 mm	Depth (inches)	2.4606 inch
Height	89.4 mm	Height (inches)	3.5197 inch
Width	6.4 mm	Width (inches)	0.252 inch
Net weight	28 g		

Temperatures

Storage temperature	-40 °C...85 °C	Ambient temperature	-40 °C...60 °C
Operating temperature		Humidity	5-85% relative humidity, Tu = 40°C, without condensation

Environmental Product Compliance

RoHS Compliance Status	Compliant with exemption
RoHS Exemption (if applicable/known)	7a, 7cI
REACH SVHC	Lead 7439-92-1
SCIP	9e2cbc49-76d9-4611-b8ec-5b4f549a0aa9

Control side

Rated control voltage	12...60 V UC ±10 %	Rated current AC	41 mA @ 12 V AC, 10.2 mA @ 60 V AC
Rated current DC	20 mA @ 12 V DC, 5 mA @ 60 V DC	Power rating	215 mW @ 12 V DC, 325 mW @ 60 V DC, 492 mVA @ 12 V AC, 612 mVA @ 60 V AC
Status indicator	Green LED	Protective circuit	Rectifier
Input frequency	45 - 65 Hz		

Load side

Rated switching voltage	250 V AC	Continuous current	6 A
Max. switching frequency at rated load	0.1 Hz	Max. switching voltage, AC	250 V
Max. switching voltage, DC	250 V	Inrush current	20 A / 20 ms
AC switching capacity (resistive), max.	1500 VA	DC switching capacity (resistive), max.	72 W @ 12 V
Switch-on delay	<40 ms	Switch-off delay	<35 ms
Contact type	1 1 NO contacts, NO contact (AgNi)	Mechanical service life	5 x 106 switching cycles
Min. switching power	1 mA @ 24 V, 10 mA @ 12 V, 100 mA @ 5 V		

General data

Operating altitude	≤ 2000 m, above sea level
Mounting rail	TS 35

Weidmüller Interface GmbH & Co. KG
Klingenbergstraße 26
D-32758 Detmold
Germany

www.weidmueller.com

Technical data

Test button available	No	
Mechanical switch position indicator	No	
Colour	black	
UL94 flammability rating component	Component	Housing
	UL94 flammability rating	V-0
	Component	Relay status indicator
	UL94 flammability rating	V-2
	Component	Pusher
	UL94 flammability rating	V-0

Insulation coordination

Rated voltage	300 V	Pollution severity	2
Surge voltage category	III	Clearance and creepage distances for control side - load side	≥ 6 mm
Dielectric strength for control side - load side	4 kVeff / 1 Min.	Type of isolation at input and output	reinforced insulation
Dielectric strength of open contact	1 kVeff / 1 min	Dielectric strength to mounting rail	4 kVeff / 1 Min.
Impulse withstand voltage	6 kV (1.2/50 µs)	Protection degree	IP20

Further details of approvals / standards

Certificate no. (cULus)	E141197

Connection data

Wire connection method	PUSH IN	Stripping length, rated connection	9 mm
Clamping range, rated connection	1.5 mm²	Clamping range, min.	0.14 mm²
Clamping range, max.	2.5 mm²	Wire connection cross section AWG, min.	AWG 26
Wire connection cross section AWG, max.	AWG 14	Wire cross-section, solid, min.	0.5 mm²
Wire cross-section, solid, max.	1.5 mm²	Wire cross-section, solid, min. (AWG)	AWG 26
Wire cross-section, solid, max. (AWG)	AWG 14	Wire connection cross section, finely stranded, min.	0.35 mm²
Wire connection cross section, finely stranded, max.	2.5 mm²	Wire cross-section, finely stranded, min. (AWG)	AWG 26
Wire cross-section, finely stranded, max. (AWG)	AWG 14	Wire connection cross-section, finely stranded with wire-end ferrules DIN 46228/4, min.	0.14 mm²
Wire connection cross-section, finely stranded with wire-end ferrules DIN 46228/4, max.	1.5 mm²	Conductor cross-section, flexible, AEH (DIN 46228-1), min.	0.5 mm²
Conductor cross-section, flexible, AEH (DIN 46228-1), max.	1.5 mm²	Blade size	0.6 x 3.5 mm

Classifications

ETIM 8.0	EC001437	ETIM 9.0	EC001437
ETIM 10.0	EC001437	ECLASS 14.0	27-37-16-01
ECLASS 15.0	27-37-16-01		

TRPL 12-60VUC 1NO

Weidmüller Interface GmbH & Co. KG
Klingenbergstraße 26
D-32758 Detmold
Germany

www.weidmueller.com

Drawings

Similar to illustration

Wiring diagram

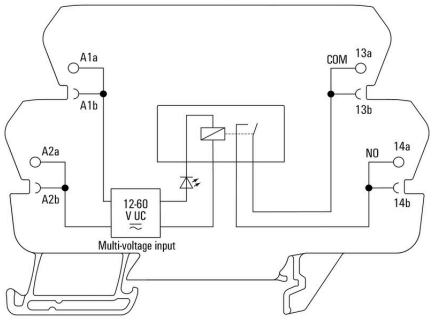

Graph

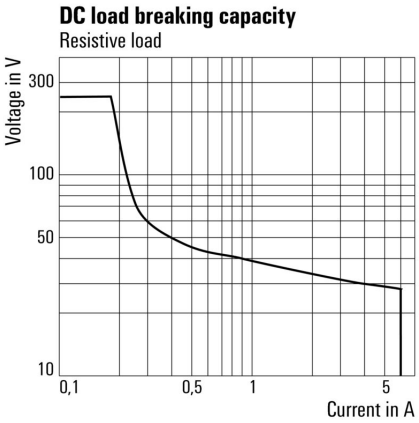

DC load limit curve Resistive load

Graph

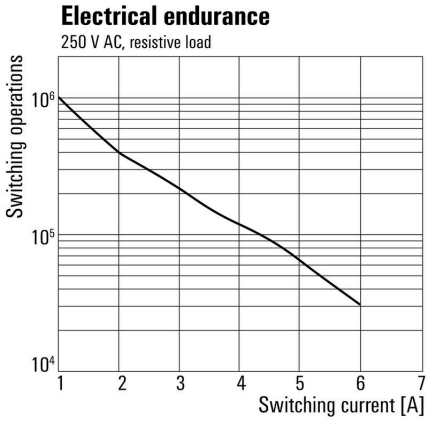

Electrical service life230 V AC resistive load

Dimensional drawing

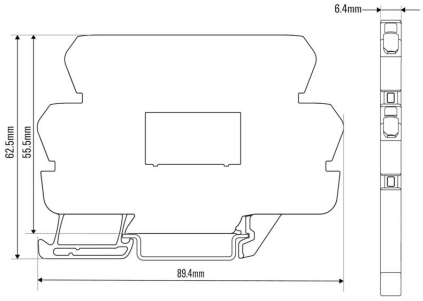

Weidmüller Interface GmbH & Co. KG
Klingenbergstraße 26
D-32758 Detmold
Germany

www.weidmueller.com

Drawings

Miscellaneous

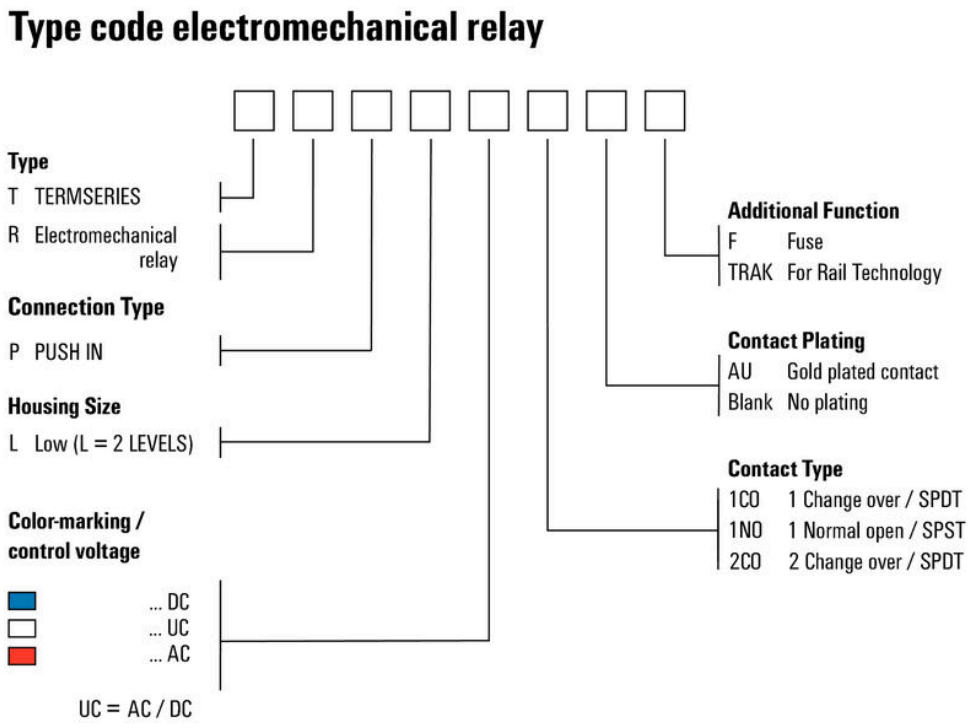

Type codes

TRPL 12-60VUC 1NO

Weidmüller Interface GmbH & Co. KG
Klingenbergstraße 26
D-32758 Detmold
Germany

www.weidmueller.com

Accessories

Blank

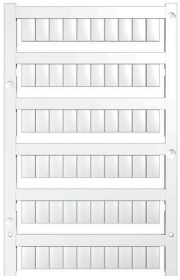

WS markers are the perfect match for the W-series connectors. Thanks to their system compatibility, the WS tags can also be used with the I-series and the Z-series. The large marking surfaces do not only permit long character strings but also multi-line text.
WS markers are ideal for labels with long, customised character strings. Thanks to the proven MultiCard format, printing with PrintJet CONNECT oder/or Plotter is possible.
• Can be fitted in strips or individually
• Markers in proven MultiCard format
For custom printing: Please send us a file of our labeling software M-Print PRO or M-Print PRO Online (without installation) for your labeling specifications.

General ordering data

Type	WS 10/6 M MC NE WS	Version
Order No.	1818400000	WS, Terminal marker, 10 x 6 mm, Pitch in mm (P): 6.00 Weidmueller,
GTIN (EAN)	4032248310876	Allen-Bradley, white
Qty.	600 ST	

Cross-connections

Adjustable cross-connections
Increase the flexibility of your cross-connections. The TERMSERIES CROSS-CONNECTION (TCC) enables individually adjustable cross-connections with up to 51 poles. The maximum number of pluggable poles has been increased to 32 poles. The strip material can be shortened to the required length very easily. The cross-connectors convince thanks to their easy handling and visibility as well as their universal connection possibilities. An additional web prevents the spring from deforming during assembly.
• Individually adjustable cross-connection with 51 poles
• Additional bar to avoid deformation of the spring
• Increased cross-connection – up to 32 poles possible
• Vibration resistance

General ordering data

Type	TCC 6.4/51 RD	Version
Order No.	2556410000	TERMSERIES, Cross-connector
GTIN (EAN)	4050118566925	
Qty.	10 ST	
Type	TCC 6.4/51 OR	Version
Order No.	2556370000	TERMSERIES, Cross-connector
GTIN (EAN)	4050118566680	
Qty.	10 ST	
Type	TCC 6.4/51 BL	Version
Order No.	2556450000	TERMSERIES, Cross-connector
GTIN (EAN)	4050118566963	
Qty.	10 ST	

Weidmüller Interface GmbH & Co. KG
Klingenbergstraße 26
D-32758 Detmold
Germany

www.weidmueller.com

Accessories

Type	TCC 6.4/51 BK	Version
Order No.	2556490000	TERMSERIES, Cross-connector
GTIN (EAN)	4050118567007	
Qty.	10 ST	
Type	TCC 6.4/2 OR	Version
Order No.	2556350000	TERMSERIES, Cross-connector
GTIN (EAN)	4050118566826	
Qty.	10 ST	
Type	TCC 6.4/2 BL	Version
Order No.	2556430000	TERMSERIES, Cross-connector
GTIN (EAN)	4050118566949	
Qty.	10 ST	
Type	TCC 6.4/2 BK	Version
Order No.	2556470000	TERMSERIES, Cross-connector
GTIN (EAN)	4050118566987	
Qty.	10 ST	
Type	TCC 6.4/10 RD	Version
Order No.	2556400000	TERMSERIES, Cross-connector
GTIN (EAN)	4050118566918	
Qty.	10 ST	
Type	TCC 6.4/10 OR	Version
Order No.	2556360000	TERMSERIES, Cross-connector
GTIN (EAN)	4050118566673	
Qty.	10 ST	
Type	TCC 6.4/10 BL	Version
Order No.	2556440000	TERMSERIES, Cross-connector
GTIN (EAN)	4050118566956	
Qty.	10 ST	
Type	TCC 6.4/10 BK	Version
Order No.	2556480000	TERMSERIES, Cross-connector
GTIN (EAN)	4050118566994	
Qty.	10 ST	
Type	TCC 12.8/26 RD	Version
Order No.	2556420000	TERMSERIES, Cross-connector
GTIN (EAN)	4050118566932	
Qty.	10 ST	
Type	TCC 12.8/26 OR	Version
Order No.	2556380000	TERMSERIES, Cross-connector
GTIN (EAN)	4050118566697	
Qty.	10 ST	
Type	TCC 12.8/26 BL	Version
Order No.	2556460000	TERMSERIES, Cross-connector
GTIN (EAN)	4050118566970	
Qty.	10 ST	
Type	TCC 12.8/26 BK	Version
Order No.	2556500000	TERMSERIES, Cross-connector
GTIN (EAN)	4050118567014	
Qty.	10 ST	
Type	TCC 6.4/2 RD	Version
Order No.	2556390000	TERMSERIES, Cross-connector
GTIN (EAN)	4050118566901	
Qty.	10 ST	

Weidmüller Interface GmbH & Co. KG
Klingenbergstraße 26
D-32758 Detmold
Germany

www.weidmueller.com

Accessories

Slotted screwdriver

VDE insulated slot-head screwdriver, SDI DIN 7437, ISO 2380/2, drive output acc. to DIN 5264, ISO 2380/1. SoftFinish grip

General ordering data

Type	SDIS 0.6X3.5X100	Version
Order No.	2749810000	Screwdriver, Blade width (B): 3.5 mm, Blade length: 100 mm, Blade
GTIN (EAN)	4050118897012	thickness (A): 0.6 mm
Qty.	1 ST	
Type	SDS 0.6X3.5X100	Version
Order No.	2749340000	Screwdriver, Blade width (B): 3.5 mm, Blade length: 100 mm, Blade
GTIN (EAN)	4050118895568	thickness (A): 0.6 mm
Qty.	1 ST	

Interface adapters

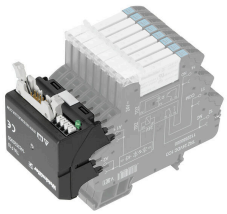

Faster signal wiring with less space
To reduce wiring times, pre-assembled cables are used between the control system and the interface level and are simply connected to the TERMSERIES adapter. This enables throughput times in electrical cabinet building to be significantly reduced. The adapter has a universal fit and offers a genuine space advantage in interaction with the TERMSERIES products with identical contours.

- Reduced wiring time due to plug-and-play concept with pre-assembled cables
- Can be applied to the input and output sides of the TERMSERIES
- Ready for plus and minus switching logic
- High space-saving due to universal fit to other TERMSERIES products

General ordering data

Type	TIA F10	Version
Order No.	1463520000	TERMSERIES, Adapter, 10-pole plug according to DIN EN 60603-13,
GTIN (EAN)	4050118323535	long locking lever, Number of signal paths: 8, Rated voltage DC : 24 V,
Qty.	1 ST	Rated current (per signal path): 125 mA

TRPL 12-60VUC 1NO

Weidmüller Interface GmbH & Co. KG
Klingenbergstraße 26
D-32758 Detmold
Germany

www.weidmueller.com

Accessories

TERMSERIES interface adapter

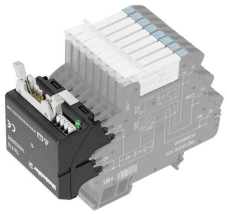

Faster signal wiring with less space
To reduce wiring times, pre-assembled cables are used between the control system and the interface level and are simply connected to the TERMSERIES adapter. This enables throughput times in electrical cabinet building to be significantly reduced. The adapter has a universal fit and offers a genuine space advantage in interaction with the TERMSERIES products with identical contours.

- Reduced wiring time due to plug-and-play concept with pre-assembled cables
- Can be applied to the input and output sides of the TERMSERIES
- Ready for plus and minus switching logic
- High space-saving due to universal fit to other TERMSERIES products

General ordering data

Type	TIA SUBD 15S	Version
Order No.	1463530000	TERMSERIES, Adapter, Sub-D, 15-pole, DIN 41652 / IEC 60807,
GTIN (EAN)	4050118323542	Number of signal paths: 8, Rated voltage DC : 24 V, Rated current (per
Qty.	1 ST	signal path): 125 mA
Type	TIAL F10	Version
Order No.	1463540000	TERMSERIES, Adapter, 10-pole plug according to DIN EN 60603-13,
GTIN (EAN)	4050118323559	long locking lever, Number of signal paths: 8, Rated voltage DC : 24 V,
Qty.	1 ST	Rated current (per signal path): 125 mA
Type	TIAL F20	Version
Order No.	1463550000	TERMSERIES, Adapter, 20-pole plug according to DIN EN 60603-13,
GTIN (EAN)	4050118331783	long locking lever, Number of signal paths: 16, Rated voltage DC : 24
Qty.	1 ST	V, Rated current (per signal path): 60 mA

Weidmüller Interface GmbH & Co. KG
Klingenbergstraße 26
D-32758 Detmold
Germany

www.weidmueller.com

Accessories

Partition plate

Versatile separation plates
Separation plates can be used to group together signals visually, to electrically
isolate modules and to insert markings for a better overview. This makes
them a particularly versatile accessory. Separation plates increase the
clearance and creepage distances between two modules, thus increasing
the rated insulation voltage between two modules to up to 600 V. Double
separation plates can be marked with WAD5 or WS10/5 markers and
enable continuous cross-connections. Installation is made easier with the
perforations to individually break out the cross-connection channels.

- Partition plates visually separates groups from each other
- Indentations for individual breaking out the crosscconnection channels
- Partition plates isolates between two modules by increasing the clearance and creepage distances of up to 600 V

General ordering data

Type	TW TXS/TXZ R3.2	Version
Order No.	1240800000	TERMSERIES, Partition plate
GTIN (EAN)	4050118028188	
Qty.	10 ST	
Type	TXL PP	Version
Order No.	2774090000	TERMSERIES-compact, Partition plate
GTIN (EAN)	4064675037866	
Qty.	10 ST	

Feed through module

Precision-fit feed-through terminals
The precisely fitting terminals enable potentials to be brought from the control side to the load side and vice versa. Due to the compatibility with the TERMSERIES, there is a uniform test system with a standardised test tap.

General ordering data

Type	TXPL FT	Version
Order No.	2774080000	TERMSERIES-compact, Feed-through terminal, PUSH IN
GTIN (EAN)	4064675037859	
Qty.	1 ST	

TRPL 12-60VUC 1NO

Weidmüller Interface GmbH & Co. KG
Klingenbergstraße 26
D-32758 Detmold
Germany

www.weidmueller.com

Accessories

Supply module

Space-saving feed-in terminals
For easy feed-in of neutral or negative potentials at the input of switched potentials at the output. Cross-connections enable space-saving connection of sensors and actuators without additional feed-through terminal blocks.

General ordering data

Type	TXPL S	Version
Order No.	2774100000	TERMSERIES-compact, Supply module, PUSH IN
GTIN (EAN)	4064675037873	
Qty.	1 ST	