Data sheet

DRR273220L

Weidmüller Interface GmbH & Co. KG
Klingenbergstraße 26
D-32758 Detmold
Germany

www.weidmueller.com

Product image

Similar to illustration

Individual relays within the D-SERIES DRR
- 2 CO contacts
- Optional AC or DC coils
- With integrated status LED

General ordering data

Version	D-SERIES DRR, Relay, Number of contacts: 2, CO contact AgSnO, Rated control voltage: 220 V DC, Continuous current: 10 A, Plug-in connection, Test button available: No
Order No.	2765050000
Type	DRR273220L
GTIN (EAN)	4064675077145
Qty.	10 items

Weidmüller Interface GmbH & Co. KG
Klingenbergstraße 26
D-32758 Detmold
Germany

www.weidmueller.com

Technical data

Approvals

Approvals	cULus
ROHS	Conform
UL File Number Search	UL Website
Certificate No. (cURus)	E312083

Dimensions and weights

Depth	66 mm	Depth (inches)	2.5984 inch
Height	34.5 mm	Height (inches)	1.3583 inch
Width	34.5 mm	Width (inches)	1.3583 inch
Net weight	67.32 g		

Temperatures

Storage temperature	-25 °C...55 °C	Ambient temperature	-25 °C...55 °C
Operating temperature		Humidity	5...85 % rel. humidity, no condensation

Environmental Product Compliance

RoHS Compliance Status	Compliant without exemption
REACH SVHC	No SVHC above 0.1 wt%

Rated data UL

Certificate No. (cURus)	E312083

Control side

Rated control voltage	220 V DC	Rated current DC	7.6 mA
Power rating	1.5 W	Coil resistance	29500 Ω ± 10 %
Status indicator	Green LED		

Load side

Rated switching voltage	250 V AC	Continuous current	10 A
Max. switching frequency at rated load	0.1 Hz	Max. switching voltage, AC	250 V
Inrush current	50 A / 50 ms	AC switching capacity (resistive), max.	2500 VA
DC switching capacity (resistive), max.	240 W @ 24 V	Switch-on delay	<30 ms
Switch-off delay	<20 ms	Contact type	2 CO contact (AgSnO)
Mechanical service life	10 x 106 switching cycles	Min. switching power	10 mA @ 12 V

General data

Test button available	No	
Mechanical switch position indicator	Yes	
Colour	Transparent	
UL94 flammability rating component	Component	Relay status indicator
	UL94 flammability rating	HB
	Component	Relay baseplate
	UL94 flammability rating	V-0
	Component	Relay cover
	UL94 flammability rating	V-2

Weidmüller Interface GmbH & Co. KG
Klingenbergstraße 26
D-32758 Detmold
Germany

www.weidmueller.com

Technical data

Insulation coordination

Rated voltage	250 V	Pollution severity	3
Surge voltage category	III	Insulating material group	IIIa
Clearance and creepage distances for control side - load side	≥ 4 mm	Dielectric strength for control side - load side	2.5 kVeff / 1 Min.
Dielectric strength of neighbouring contacts	2.5 kVeff / 1 Min.	Dielectric strength of open contact	1.2 kVeff /1 min.
Impulse withstand voltage	4 kV (1.2/50 µs)	Protection degree	IP20

Further details of approvals / standards

Certificate No. (cURus)	E312083

Connection data

Wire connection method	Plug-in connection

Classifications

ETIM 8.0	EC001437	ETIM 9.0	EC001437
ETIM 10.0	EC001437	ECLASS 14.0	27-37-16-01
ECLASS 15.0	27-37-16-01		

DRR273220L

Weidmüller Interface GmbH & Co. KG
Klingenbergstraße 26
D-32758 Detmold
Germany

www.weidmueller.com

Drawings

Wiring diagram

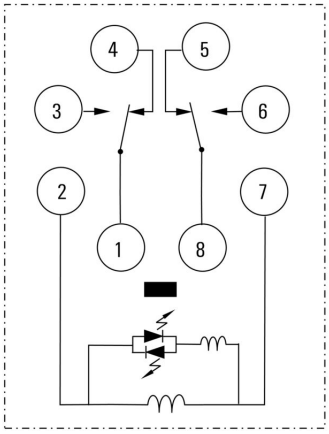

View of Pins from below

Graph

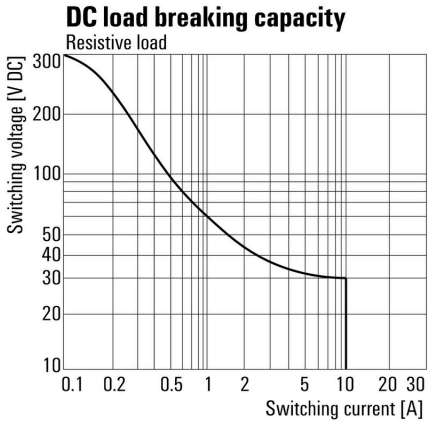

DC load limit curve Resistive load

Graph

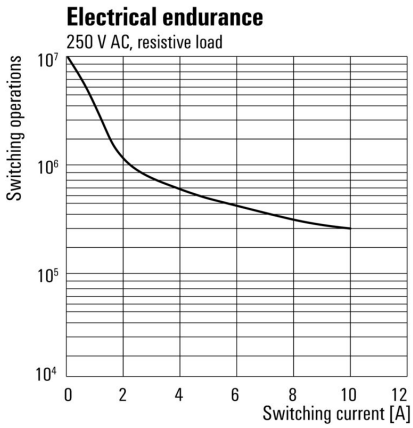

Electrical service life

Graph

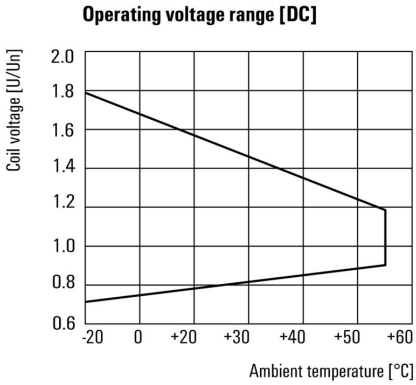

DC operational voltage range

Dimensional drawing

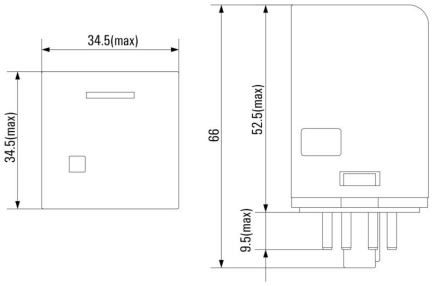

Weidmüller Interface GmbH & Co. KG
Klingenbergstraße 26
D-32758 Detmold
Germany

www.weidmueller.com

Drawings

Miscellaneous

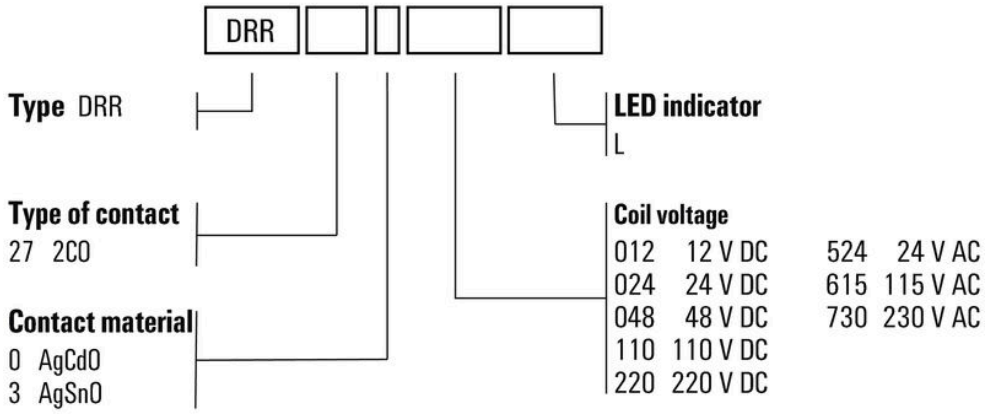

Type codes

Weidmüller Interface GmbH & Co. KG
Klingenbergstraße 26
D-32758 Detmold
Germany

www.weidmueller.com

Accessories

Sockets

Relay sockets for the D-SERIES DRR relays
- 2 or 3 CO contacts
- Screw connection

General ordering data

Type	SRD 2CO ECO	Version
Order No.	1132810000	D-SERIES DRR, Relay socket, Number of contacts: 2, CO contact,
GTIN (EAN)	4032248952663	Continuous current: 12 A, Screw connection
Qty.	10 ST	

Protection modules

Pluggable protective modules for the D-SERIES relay sockets, with optional protective functions.
- With free-wheeling diode or RC filter

General ordering data

Type	RIM 5 6/230VDC	Version
Order No.	1174650000	D-SERIES, Free-wheeling diode, Rated control voltage: 6...230 V DC,
GTIN (EAN)	4032248971305	Plug-in connection
Qty.	10 ST	

Retaining clips

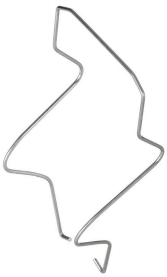

Retaining clip for D-SERIES DRR relays
- Metal retaining clip

General ordering data

Type	DRR CLIP M	Version
Order No.	1134160000	D-SERIES DRR, Retaining clip
GTIN (EAN)	4032248953479	
Qty.	10 ST	

Weidmüller Interface GmbH & Co. KG
Klingenbergstraße 26
D-32758 Detmold
Germany

www.weidmueller.com

Accessories

Blank

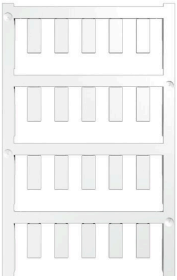

ESG is the tried-and-tested marker in MultiCard format for use on many well-known electrical devices. The result is high-quality device marking with a high-contrast appearance.
Various types are available for devices from manufacturers like Siemens, ABB, Beckhoff etc.
Advantages at a glance:

- Tags for universal usage, self-adhesive or clip-on tags, depending on type
- For aligned equipment, e.g. circuit breakers, we supply ESG markers for clipping onto tag rails
- Individual laser-quality printing according to specifications

For custom printing: Please send us a file of our labeling software M-Print PRO or M-Print PRO Online (without installation) for your labeling specifications.

General ordering data

Type	ESG 6/15 K MC NE WS	Version
Order No.	1880100000	ESG, Device markers x 15 mm, PA 66, Colour: white, Self-adhesive
GTIN (EAN)	4032248478781	
Qty.	200 ST	
Type	ESG 6/15 K MC NE GE	Version
Order No.	1880130000	ESG, Device markers x 15 mm, PA 66, Colour: yellow, Self-adhesive
GTIN (EAN)	4032248478910	
Qty.	200 ST	
Type	ESG 6/17 K MC NE GE	Version
Order No.	1880110000	ESG, Device markers x 17 mm, PA 66, Colour: yellow, Self-adhesive
GTIN (EAN)	4032248478798	
Qty.	200 ST	
Type	ESG 6/17 K MC NE WS	Version
Order No.	1880120000	ESG, Device markers x 17 mm, PA 66, Colour: white, Self-adhesive
GTIN (EAN)	4032248478804	
Qty.	200 ST	
Type	ESG 9/11 K MC NE WS	Version
Order No.	1857440000	ESG, Device markers x 11 mm, PA 66, Colour: white, Self-adhesive
GTIN (EAN)	4032248402731	
Qty.	200 ST	

Weidmüller Interface GmbH & Co. KG
Klingenbergstraße 26
D-32758 Detmold
Germany

www.weidmueller.com

Accessories

Blank, adhesive backing

SM is a MultiCard marker for labelling control and signalling devices. The tags are clipped into the carriers or attached by means of the adhesive film already fitted to them. Customised tags can be created with the PrintJet CONNECT or Plotter marking systems.

- Users can quickly produce tags to suit their needs
- No need to stock expensive standard tags
- Highly resistant printing quality when using the PrintJet as a substitute for engraving
- For extreme demands, we recommend the ETO SM protective film
- Holders can be used for the 22-mm or 30-mm-diameter push-buttons from Siemens, ABB, Moeller and Télémécanique

For custom printing: Please send us a file of our labeling software M-Print PRO or M-Print PRO Online (without installation) for your labeling specifications.

General ordering data

Type	SM 18/9.5 K MC NE WS	Version
Order No.	1248580000	SwitchMark, Device markers, 9.5 x 18 mm, white
GTIN (EAN)	4050118038965	
Qty.	200 ST	
Type	SM 18/9.5 K MC NE GR	Version
Order No.	1248610000	SwitchMark, Device markers, 9.5 x 18 mm, grey
GTIN (EAN)	4050118038675	
Qty.	200 ST	
Type	SM 18/9.5 K MC NE GE	Version
Order No.	1248590000	SwitchMark, Device markers, 9.5 x 18 mm, Siemens 3 SB, yellow
GTIN (EAN)	4050118038958	
Qty.	200 ST	

ESG 6/15

Guaranteed long service life: ESG
The multi-colour and multi-format labels have a strong adhesive layer to ensure the best possible adhesion to the underlying surface. Double laminated polyester makes the basic material very thin and yet extremely tear-resistant.
Your benefits with MultiMark

- “Different materials for various requirements”
- Can be used with equipment from many manufacturers
- Device markers with a familiar design

General ordering data

Type	ESG 6/15 MM WS	Version
Order No.	2619940000	ESG, Device markers, 6 x 15 mm, white
GTIN (EAN)	4050118626148	
Qty.	3000 ST	

Weidmüller Interface GmbH & Co. KG
Klingenbergstraße 26
D-32758 Detmold
Germany

www.weidmueller.com

Accessories

ESG 6/17

Guaranteed long service life: ESG
The multi-colour and multi-format labels have a strong adhesive layer to ensure the best possible adhesion to the underlying surface. Double laminated polyester makes the basic material very thin and yet extremely tear-resistant.
Your benefits with MultiMark
- “Different materials for various requirements”
- Can be used with equipment from many manufacturers
- Device markers with a familiar design

General ordering data

Type	ESG 6/17 MM WS	Version
Order No.	2005100000	ESG, Device markers, 6 x 17 mm, white
GTIN (EAN)	4050118390728	
Qty.	3000 ST	

Data sheet

DRR273220L

Weidmüller Interface GmbH & Co. KG
Klingenbergstraße 26
D-32758 Detmold
Germany

www.weidmueller.com

Counterpart

Sockets

Relay sockets for the D-SERIES DRR relays
- 2 or 3 CO contacts
- Screw connection

General ordering data

Type	SRD 2CO ECO	Version
Order No.	1132810000	D-SERIES DRR, Relay socket, Number of contacts: 2, CO contact,
GTIN (EAN)	4032248952663	Continuous current: 12 A, Screw connection
Qty.	10 ST	