Data sheet

SV 7.62HP/06/90G 3.5SN BK BX CO

Weidmüller Interface GmbH & Co. KG
Klingenbergstraße 26
D-32758 Detmold
Germany

www.weidmueller.com

Similar to illustration



Single-row, high-current and high-performance male headers for side-by-side mounting without sacrificing any poles or with flange for fast fixing without tools. Maximum connection and operating reliability thanks to a mating profile that prevents incorrect connection, unique coding diversity and additional fastening in the flange.

General ordering data

Version	PCB plug-in connector, male header, closed side, THT solder connection, 7.62 mm, Number of poles: 6, 90°, Solder pin length (l): 3.5 mm, tinned, black, Box
Order No.	2754240000
Type	SV 7.62HP/06/90G 3.5SN BK BX CO
GTIN (EAN)	4050118898842
Qty.	36 items
Product data	IEC: 1000 V / 57 A UL: 300 V / 40.5 A
Packaging	Box

Data sheet

SV 7.62HP/06/90G 3.5SN BK BX CO

Weidmüller Interface GmbH & Co. KG
Klingenbergstraße 26
D-32758 Detmold
Germany

www.weidmueller.com

Technical data

Dimensions and weights

Depth	28.3 mm	Depth (inches)	1.1142 inch
Height	14.9 mm	Height (inches)	0.5866 inch
Height of lowest version	11.4 mm	Width	45.72 mm
Width (inches)	1.8 inch	Net weight	12.1 g

Environmental Product Compliance

RoHS Compliance Status	Compliant without exemption
REACH SVHC	No SVHC above 0.1 wt%

System specifications

Product family	OMNIMATE Power - series BV/SV 7.62HP	Mounting onto the PCB	THT solder connection
Pitch in mm (P)	7.62 mm	Pitch in inches (P)	0.300 "
Outgoing elbow	90°	Number of poles	6
Number of solder pins per pole	2	Solder pin length (l)	3.5 mm
Solder pin length tolerance	+0.1 / -0.3 mm	Solder pin dimensions	0.8 x 1.0 mm
Solder eyelet hole diameter tolerance (D)	+ 0,1 mm	Number of rows	1
Pin series quantity	1	Touch-safe protection acc. to DIN VDE 57 106	Touch-safe above the printed circuit board
Touch-safe protection acc. to DIN VDE 0470	IP 20	Protection degree	IP20, when fully mounted
Volume resistance	2.00 mΩ	Can be coded	Yes
Plugging cycles	25		

Material data

Insulating material	PA GF	Colour	black
Colour chart (similar)	RAL 9011	Insulating material group	II
Comparative Tracking Index (CTI)	≥ 500	Moisture Level (MSL)	
UL 94 flammability rating	V-0	Contact material	Copper alloy
Contact surface	tinned	Layer structure of solder connection	1...3 µm Ni / 4...6 µm Sn matt
Storage temperature, min.	-40 °C	Storage temperature, max.	70 °C
Operating temperature, min.	-50 °C	Operating temperature, max.	130 °C

Rated data acc. to IEC

tested acc. to standard	IEC 60664-1, IEC 61984	Rated current, min. number of poles (Tu=20°C)	57 A
Rated current, max. number of poles (Tu=20°C)	41 A	Rated current, min. number of poles (Tu=40°C)	41 A
Rated voltage for surge voltage class / pollution degree II/2	1000 V	Rated voltage for surge voltage class / pollution degree III/2	630 V
Rated voltage for surge voltage class / pollution degree III/3	630 V	Rated impulse voltage for surge voltage class/ pollution degree II/2	6 kV
Rated impulse voltage for surge voltage class/ pollution degree III/2	6 kV	Rated impulse voltage for surge voltage class/ contamination degree III/3	6 kV
Short-time withstand current resistance	3 x 1s with 420 A	Creepage distance, min.	9.6 mm
Clearance, min.	6.9 mm		

Rated data acc. to CSA

Rated voltage (Use group B / CSA)	300 V	Rated voltage (Use group C / CSA)	300 V
Rated voltage (Use group D / CSA)	600 V	Rated current (Use group B / CSA)	35 A

SV 7.62HP/06/90G 3.5SN BK BX CO

Weidmüller Interface GmbH & Co. KG
Klingenbergstraße 26
D-32758 Detmold
Germany

www.weidmueller.com

Technical data

Rated current (Use group C / CSA)	35 A	Rated current (Use group D / CSA)	5 A

Rated data acc. to UL 1059

Rated voltage (Use group B / UL 1059)	300 V	Rated voltage (Use group C / UL 1059)	300 V
Rated voltage (Use group D / UL 1059)	600 V	Rated voltage (Use group F / UL 1059)	744 V
Rated current (Use group B / UL 1059)	40.5 A	Rated current (Use group C / UL 1059)	40.5 A
Rated current (Use group D / UL 1059)	5 A	Rated current (Use group F / UL 1059)	40.5 A
Creepage distance, min.	9.6 mm	Clearance distance, min.	6.9 mm

Packing

Packaging	Box	VPE length	349.00 mm
VPE width	135.00 mm	VPE height	40.00 mm

Important note

IPC conformity	Conformity: The products are developed, manufactured and delivered according international recognized standards and norms and comply with the assured properties in the data sheet resp. fulfill decorative properties in accordance with IPC-A-610 "Class 2". Further claims on the products can be evaluated on request.
Notes	• Additional variants on request • Rated current related to rated cross-section & min. No. of poles. • P on drawing = pitch • Rated data refer only to the component itself. Clearance and creepage distances to other components are to be designed in accordance with the relevant application standards. • Diameter of solder eyelet D = 1.4+0.1 mm starting with 8-pole • In accordance with IEC 61984, OMNIMATE-connectors are connectors without breaking capacity (COC). During designated use, connectors are not allowed to be engaged or disengaged when live or under load • Long term storage of the product with average temperature of 50 °C and maximum humidity 70%, 36 months

Classifications

ETIM 8.0	EC002637	ETIM 9.0	EC002637
ETIM 10.0	EC002637	ECLASS 14.0	27-46-02-01
ECLASS 15.0	27-46-02-01		

SV 7.62HP/06/90G 3.5SN BK BX CO

Weidmüller Interface GmbH & Co. KG
Klingenbergstraße 26
D-32758 Detmold
Germany

www.weidmueller.com

Drawings

Dimensional drawing

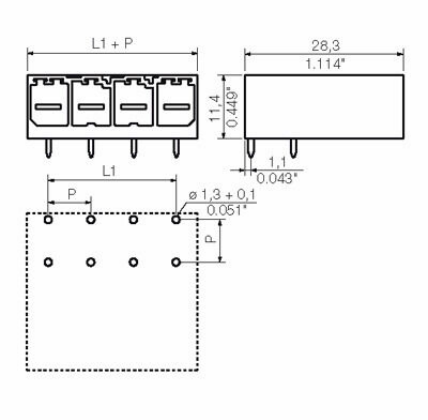

SV 7.62HP/06/90G 3.5SN BK BX CO

Weidmüller Interface GmbH & Co. KG
Klingenbergstraße 26
D-32758 Detmold
Germany

www.weidmueller.com

Accessories

Coding elements



The pluggable connections for power electronics - optimised for modern drive technologies, e.g. motor starters, frequency converters and servo-controllers. OMNIMATE Power sets the new standard – with increased safety and innovative solutions such as the pluggable shield, integrated signal contacts and one-handed operation.
The three product lines offer you further advantages:
- Application-oriented scalability: from the compact 4 mm² connector for 29 A (IEC) or 20 A (UL) up to the sturdy 16 mm² connector for 76 A (IEC) or 54 A (UL)
- Unlimited usage up to 1,000 V (IEC) or 600 V (UL)
- A variety of application optimised mounting options

Our service:
Design your individual connectors simply by using the product configurator.

General ordering data

Type	BV/SV 7.62HP KO	Version
Order No.	1937590000	PCB plug-in connector, Accessories, Coding element, black, Number
GTIN (EAN)	4032248608881	of poles: 1
Qty.	50 ST	