Data sheet

KCMA-28-250-5A-1VA-1

Weidmüller Interface GmbH & Co. KG
Klingenbergstraße 26
D-32758 Detmold
Germany

www.weidmueller.com

Product image, Similar to illustration

Current transformers for retrofitting
Features:
- especially suitable for use in hard-to-reach places
- no cutting of the primary conductors necessary
- Unfolding of the current transformer without additional tools

General ordering data

Version	Primary current: 250 A, Secondary current max.: 5 A, Load: 1 VA, Tolerance class: 1, Split-core current transformer
Order No.	2753110000
Type	KCMA-28-250-5A-1VA-1
GTIN (EAN)	4050118896756
Qty.	1 items
Manufacturer	MBS AG

KCMA-28-250-5A-1VA-1

Weidmüller Interface GmbH & Co. KG
Klingenbergstraße 26
D-32758 Detmold
Germany

www.weidmueller.com

Technical data

Approvals

ROHS	Conform

Dimensions and weights

Depth	59 mm	Depth (inches)	2.3228 inch
Height	79.5 mm	Height (inches)	3.1299 inch
Width	49 mm	Width (inches)	1.9291 inch
Net weight	232 g		

Temperatures

Storage temperature		Operating temperature	-5 °C...50 °C

Environmental Product Compliance

RoHS Compliance Status	Compliant without exemption
REACH SVHC	No SVHC above 0.1 wt%

Dimensions of live conductors

Type of conductor	Insulated conductor only	Round conductor	27.00 mm
Installation location	Indoor use		

Electrical attributes

Tolerance class	1	Secondary current	0...5 A
Load	1 VA	Primary current	250 A

Technical properties

Cable length	2.5 m	Protection degree	IP20
Nominal frequency	50 Hz		

Insulation coordination

Tolerance class	1

Classifications

ETIM 8.0	EC002048	ETIM 9.0	EC002048
ETIM 10.0	EC002048	ECLASS 14.0	27-21-09-02
ECLASS 15.0	27-21-09-02		

KCMA-28-250-5A-1VA-1

Weidmüller Interface GmbH & Co. KG
Klingenbergstraße 26
D-32758 Detmold
Germany

www.weidmueller.com
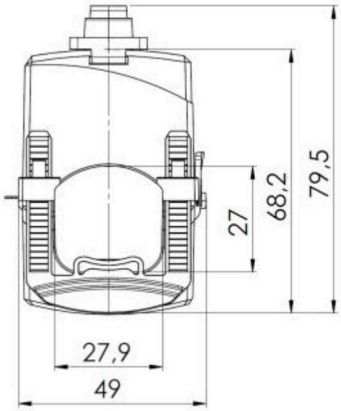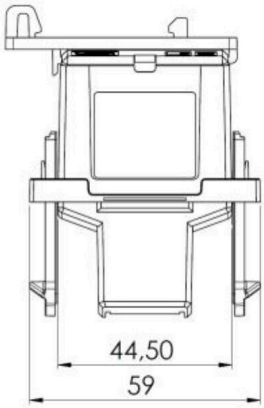
Drawings