Data sheet

CABTITE EP A 24/14 GY

Weidmüller Interface GmbH & Co. KG
Klingenbergstraße 26
D-32758 Detmold
Germany

www.weidmueller.com

Cabtite - Cable Entry Plates
Insert cables and wires without plugs into control cabinets, enclosures or machines in the smallest of spaces, easily and in a space-saving manner.
With the Cabtite cable entry plates, you can do this even in harsh environments, whether protective hoses, pneumatic/hydraulic hoses or fiber optic cables - you can install your cables quickly, easily and in a space-saving manner. The installation is done through only one rectangular wall cut-out and is therefore up to 40% faster in the installation time (compared to standard cable glands).
The tool less IP54 snap version of cable entry plates are tested according to DIN EN 60529 and made of UL94 V-0 certified TPE material, suitable for the temperature range from -40°C to +90°C.
Cabtite cable entry plates are an economical alternative to conventional cable glands.

General ordering data

Version	Cable entry plate, Cabtite (cable entry system), TPE, grey, Height: 44 mm, Width: 142 mm, Depth: 12 mm, -40 °C...90 °C, IP54
Order No.	2743550000
Type	CABTITE EP A 24/14 GY
GTIN (EAN)	4064675120971
Qty.	10 items

CABTITE EP A 24/14 GY

Weidmüller Interface GmbH & Co. KG
Klingenbergstraße 26
D-32758 Detmold
Germany

www.weidmueller.com

Technical data

Approvals

Approvals	
ROHS	Conform
UL File Number Search	UL Website
Certificate No. (cURus)	E223801

Dimensions and weights

Depth	12 mm	Depth (inches)	0.4724 inch
Height	44 mm	Height (inches)	1.7323 inch
Width	142 mm	Width (inches)	5.5905 inch
Wall thickness, min.	1.5 mm	Wall thickness, max.	2.5 mm
Net weight	45.3 g		

Temperatures

Operating temperature	-40 °C...90 °C

Environmental Product Compliance

RoHS Compliance Status	Compliant without exemption
REACH SVHC	No SVHC above 0.1 wt%

General information

Silicone	No	UL 94 flammability rating	V-0
Protection degree	IP54	Basic material	TPE
Protection class (UL)	Type 1, Type 12		

Number of connectable cables

Type of mounting	Snap-on	
Number of connectable cables	14	
Cable entries	Number	14
	Cable diameter, min.	1 mm
	Cable diameter, max.	12.1 mm
	Cable type	Round cable

Classifications

ETIM 8.0	EC002624	ETIM 9.0	EC002624
ETIM 10.0	EC002624	ECLASS 14.0	27-18-28-15
ECLASS 15.0	27-18-28-15		

CABTITE EP A 24/14 GY

Weidmüller Interface GmbH & Co. KG
Klingenbergstraße 26
D-32758 Detmold
Germany

www.weidmueller.com
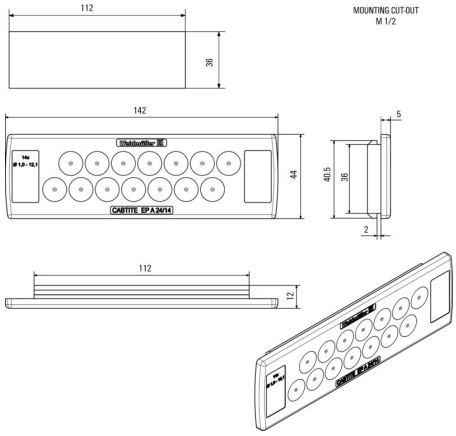
Drawings