Data sheet

VPU AC II US 2 R 60/50

Weidmüller Interface GmbH & Co. KG
Klingenbergstraße 26
D-32758 Detmold
Germany

www.weidmueller.com

Picture similar

- compact SPD to install in application by NFPA 79
- no additional overcurrent protection devices needed
- short circuit current rating (SCCR) up to 200 kA
- tested according to IEC/EN 61643-11 and UL 1449 4.Ed

General ordering data

Version	Surge voltage arrester, Low voltage, Surge protection, with remote contact, Single-phase, TN-S
Order No.	2730790000
Type	VPU AC II US 2 R 60/50
GTIN (EAN)	4050118807318
Qty.	1 items

Data sheet

VPU AC II US 2 R 60/50

Weidmüller Interface GmbH & Co. KG
Klingenbergstraße 26
D-32758 Detmold
Germany

www.weidmueller.com

Technical data

Approvals

Approvals	
ROHS	Conform
UL File Number Search	UL Website
Certificate no. (cULus)	E354261

Dimensions and weights

Depth	68 mm	Depth (inches)	2.6772 inch
Depth including DIN rail	76 mm	Height	104.5 mm
Height (inches)	4.1142 inch	Width	36 mm
Width (inches)	1.4173 inch	Mounting dimension - height	75 mm
Net weight	238 g		

Temperatures

Storage temperature	-40 °C...85 °C	Ambient temperature	-40 °C...85 °C
Operating temperature	-40 °C...85 °C	Humidity	5 - 95% rel. humidity

Environmental Product Compliance

RoHS Compliance Status	Compliant without exemption
REACH SVHC	No SVHC above 0.1 wt%

Rated data UL

Ambient temperature (operational), max.	85 °C	Rated Voltage UN	60 V
VPR (N-PE)	330 V	MCOV (L-PE)	75 V
MCOV (L/N-PE)	75 V	MCOV (N-PE)	75 V
SCCR	100 kA	In	20 kA
Category	SPD TYPE 1	Connection cross-section AWG, min.	AWG 14
Connection cross-section AWG, max.	AWG 6	Ambient temperature (operational), min.	-40 °C
MODE	all modes	VPR (L-N)	700 V
VPR (L-PE)	330 V	Voltage type	AC
UL Energy Networks	Split-Phase		

Connection data, remote alert

Cross-section for connected wire, solid core, min.	0.25 mm²	Stripping length	12 mm
Cross-section for connected wire, solid core, max. (AWG)	AWG 10	Connection type	PUSH IN
Cross-section for connected wire, solid core, max.	1.5 mm²	Cross-section for connected wire, solid core, min. (AWG)	AWG 30

General data

Optical function display	green = OK; red = arrester is defective - replace	Segment	Power distribution
Version	Surge protection, with remote contact	Design	Installation housing; 2TE, Insta IP 20
UL 94 flammability rating	V-0	Colour	orange, black
Protection degree	IP20 in installed state	Mounting rail	TS 35

VPU AC II US 2 R 60/50

Weidmüller Interface GmbH & Co. KG
Klingenbergstraße 26
D-32758 Detmold
Germany

www.weidmueller.com

Technical data

Operating altitude	≤ 4000 m		

Insulation coordination acc. to EN 50178

Surge voltage category	III	Pollution severity	2

Rated data IEC / EN

Number of poles	2	Leakage current at Un	0.5 mA
Signalling contact	250 V 1A 1CO	Rated voltage (AC)	60 V
Low voltage network	Single-phase, TN-S	Voltage type	AC
Temporary surge voltage (over-voltage) - TOV	114 V	Fuse protection	No Fuse neccessary ≤315 A gG, 250 A gG @50 kA Isccr, 315 A gG @25 kA Isccr
Response time / fallback time	≤ 25 ns	Frequency range, max.	60 Hz
Frequency range, min.	50 Hz	Standards	IEC 61643-11, EN 61643-11, UL 1449, NFPA 79
Requirements class, acc. to EN 61643-11	T2, T3	Requirements category acc. to IEC 61643-11	Type II
Max. continuous voltage, Uc (AC)	75 V	Energy coordination (≤10 m)	Type II, Type III
Discharge current In (8/20µs) wire-PE	20 kA	Discharge current Imax (8/20µs) wire-PE	50 kA
SPD type	T2	Protection level Up at IN (L/N-PE)	≤ 0.8 kV
Short-circuit current rating ISCCR	50 kA	Follow-on current extinguishing capability Ifi	Follow current need not be taken into account
Integrated back-up fuse	No		

Connection data

Stripping length	18 mm	Wire connection method	Screw connection
Type of connection	Screw connection	Stripping length, rated connection	18 mm
Tightening torque, min.	3 Nm	Tightening torque, max.	4.5 Nm
Clamping range, rated connection	16 mm²	Clamping range, min.	1.5 mm²
Clamping range, max.	35 mm²	Wire connection cross section AWG, min.	AWG 16
Wire connection cross section AWG, max.	AWG 2	Wire cross-section, solid, min.	1.5 mm²
Wire cross-section, solid, max.	35 mm²	Wire connection cross section, finely stranded, min.	1.5 mm²
Wire connection cross section, finely stranded, max.	25 mm²	Conductor cross-section, flexible, AEH (DIN 46228-1), min.	2.5 mm²
Conductor cross-section, flexible, AEH (DIN 46228-1), max.	35 mm²	Connection cross-section, stranded, min.	1.5 mm²
Connection cross-section, stranded, max.	35 mm²		

Electrical data

Voltage type	AC

General data

Number of poles	2	Protection degree	IP20 in installed state
Colour	orange, black		

Ratings IECEx/ATEX/cUL

Certificate no. (cULus)	E354261

VPU AC II US 2 R 60/50

Weidmüller Interface GmbH & Co. KG
Klingenbergstraße 26
D-32758 Detmold
Germany

www.weidmueller.com

Technical data

Guarantee

Time interval	5 years

Classifications

ETIM 8.0	EC000941	ETIM 9.0	EC000941
ETIM 10.0	EC000941	ECLASS 14.0	27-17-12-02
ECLASS 15.0	27-17-12-02		

VPU AC II US 2 R 60/50

Weidmüller Interface GmbH & Co. KG
Klingenbergstraße 26
D-32758 Detmold
Germany

www.weidmueller.com

Drawings

Electric symbol

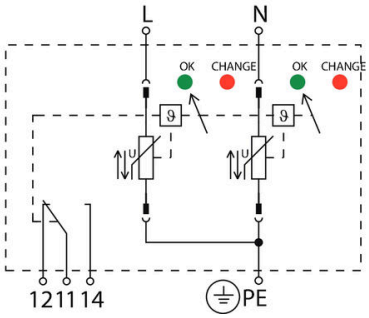

Schematic circuit diagram

VPU AC II US 2 R 60/50

Weidmüller Interface GmbH & Co. KG
Klingenbergstraße 26
D-32758 Detmold
Germany

www.weidmueller.com

Accessories

Crosshead screwdriver Phillips

VDE insulated crosshead screwdriver, for Phillips screws, SDIK PH DIN 7438, ISO 8764/2-PH, output to ISO 8764-PH, SoftFinish grip

General ordering data

Type	SDIK PH1 X 80	Version
Order No.	2749890000	Screwdriver, Blade width (B): 1 mm, 80 mm, Blade thickness (A): 1
GTIN (EAN)	4050118897098	
Qty.	1 ST	

Slotted screwdriver

VDE insulated slot-head screwdriver, SDI DIN 7437, ISO 2380/2, drive output acc. to DIN 5264, ISO 2380/1. SoftFinish grip

General ordering data

Type	SDIS 1.0X5.5X125	Version
Order No.	2749850000	Screwdriver, Blade width (B): 5.5 mm, Blade length: 125 mm, Blade
GTIN (EAN)	4050118897050	thickness (A): 1 mm
Qty.	1 ST	

Blank

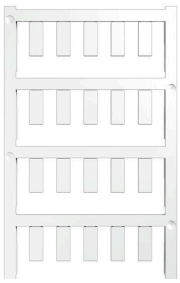

ESG is the tried-and-tested marker in MultiCard format for use on many well-known electrical devices. The result is high-quality device marking with a high-contrast appearance.
Various types are available for devices from manufacturers like Siemens, ABB, Beckhoff etc.
Advantages at a glance:

- Tags for universal usage, self-adhesive or clip-on tags, depending on type
- For aligned equipment, e.g. circuit breakers, we supply ESG markers for clipping onto tag rails
- Individual laser-quality printing according to specifications

For custom printing: Please send us a file of our labeling software M-Print PRO or M-Print PRO Online (without installation) for your labeling specifications.

VPU AC II US 2 R 60/50

Weidmüller Interface GmbH & Co. KG
Klingenbergstraße 26
D-32758 Detmold
Germany

www.weidmueller.com

Accessories

General ordering data

Type	ESG 6/15 K MC NE WS	Version
Order No.	1880100000	ESG, Device markers x 15 mm, PA 66, Colour: white, Self-adhesive
GTIN (EAN)	4032248478781	
Qty.	200 ST	

VPU Series

Extensive accessories round off the product range

General ordering data

Type	VPU AC EXTENDER	Version
Order No.	3123500000	
GTIN (EAN)	4099987270175	
Qty.	8 ST	

Spare arrester

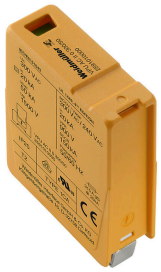

- compact SPD to install in application by NFPA 79
- no additional overcurrent protection devices needed
- short circuit current rating (SCCR) up to 200 kA
- tested according to IEC/EN 61643-11 and UL 1449 4.Ed

General ordering data

Type	VPU AC II US 0 60/50	Version
Order No.	2726810000	Spare arrester, Surge protection
GTIN (EAN)	4050118802474	
Qty.	1 ST	

VPU AC II US 2 R 60/50

Weidmüller Interface GmbH & Co. KG
Klingenbergstraße 26
D-32758 Detmold
Germany

www.weidmueller.com

Accessories

VPU Series

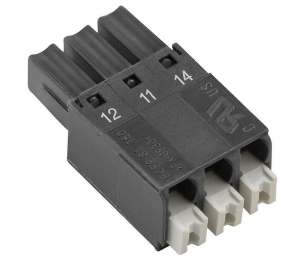

Extensive accessories round off the product range

General ordering data

Type	VPU LOCKING CLIP S	Version
Order No.	2735080000	
GTIN (EAN)	4050118826050	
Qty.	10 ST	
Type	PLUG VPU AC	Version
Order No.	2855300000	
GTIN (EAN)	4064675533283	
Qty.	10 ST	