Data sheet

WPD 108 1X120/2X35+3X25+4X16 BK

Weidmüller Interface GmbH & Co. KG
Klingenbergstraße 26
D-32758 Detmold
Germany

www.weidmueller.com

Our WPD 1XX distribution blocks are used in all situations where power is supplied and distributed. Their user-friendly design creates a better overview and enables Rapid, efficient implementation of space-saving power distribution.

General ordering data

Version	Potential distributor terminal, Screw connection, black, 120 mm², 400 A, 1000 V, Number of connections: 10, Number of levels: 1
Order No.	2725380000
Type	WPD 108 1X120/2X35+3X25+4X16 BK
GTIN (EAN)	4050118796506
Qty.	1 items

WPD 108 1X120/2X35+3X25+4X16 BK

Weidmüller Interface GmbH & Co. KG
Klingenbergstraße 26
D-32758 Detmold
Germany

www.weidmueller.com

Technical data

Approvals

Approvals	
ROHS	Conform
UL File Number Search	UL Website
Certificate No. (cURus)	E60693

Dimensions and weights

Depth	77 mm	Depth (inches)	3.0315 inch
Height	95 mm	Height (inches)	3.7401 inch
Width	51.1 mm	Width (inches)	2.0118 inch
Net weight	480 g		

Temperatures

Storage temperature	-25 °C...55 °C	Ambient temperature	-50 °C...85 °C
Continuous operating temp., min.	-50 °C	Continuous operating temp., max.	130 °C

Environmental Product Compliance

RoHS Compliance Status	Compliant with exemption
RoHS Exemption (if applicable/known)	6c
REACH SVHC	Lead 7439-92-1
SCIP	e1c310ef-6b67-4efa-80a6-d307472f4de9

Material data

Basic material	Wemid	Colour	black
UL 94 flammability rating	V-0		

Rating data IECEx/ATEX

Certificate No. (ATEX)	CNEX16ATEX0005U	Certificate No. (IECEX)	IECEXCNEX16.0005U
Max. voltage (ATEX)	1100 V	Current (ATEX)	250 A
Wire cross section max. (ATEX)	120 mm²	Max. voltage (IECEX)	1100 V
Current (IECEX)	250 A		

System specifications

Version	Screw connection	End cover plate required	No
Number of potentials	1	Number of levels	1
Number of clamping points per level	2	Number of potentials per tier	1
Levels cross-connected internally	Yes	Mounting rail	Mounting plate, TS 35
N-function	Yes	PE function	No
PEN function	No		

Additional technical data

Open sides	closed	Explosion-tested version	Yes
Type of mounting	Snap-on		

WPD 108 1X120/2X35+3X25+4X16 BK

Weidmüller Interface GmbH & Co. KG
Klingenbergstraße 26
D-32758 Detmold
Germany

www.weidmueller.com

Technical data

CSA rating data

Certificate number (cCSAus)	70128467

Conductors for clamping (additional connection)

Connection type, additional connection	Screw connection

Conductors for clamping (rated connection)

Wire connection cross section AWG, max.	kcmil 250	Connection direction	on side
Type of connection 2	Screw connection	Type of connection	Screw connection
Number of connections	10	Clamping range, max.	120 mm²
Clamping range, min.	1.5 mm²	Wire connection cross section AWG, min.	AWG 16
Wire connection cross-section, finely stranded with wire-end ferrules DIN 46228/4, min.	1.5 mm²	Wire connection cross-section, finely stranded with wire-end ferrules DIN 46228/1, max.	95 mm²
Wire connection cross-section, finely stranded with wire-end ferrules DIN 46228/1, min.	1.5 mm²	Wire connection cross section, finely stranded, max.	0 mm²
Wire connection cross section, finely stranded, min.	1.5 mm²	Connection cross-section, stranded, max.	120 mm²
Connection cross-section, stranded, min.	1.5 mm²	Wire connection cross-section, solid core, max.	120 mm²
Wire connection cross-section, solid core, min.	1.5 mm²		

General

Number of poles	1	Wire connection cross section AWG, max.	kcmil 250
Wire connection cross section AWG, min.	AWG 16	Standards	IEC 60947-7-1, UL 1059
Mounting rail	Mounting plate, TS 35		

Rating data

Rated cross-section	120 mm²	Rated voltage	1000 V
Rated AC voltage	1000 V	Rated DC voltage	1500 V
Nominal current	400 A	Current at maximum wires	400 A
Standards	IEC 60947-7-1, UL 1059	Power loss in accordance with IEC 60947-7-x	4.00 W

UL rating data

Certificate No. (cURus)	E60693

Important note

Product information	The socket complies with flammability class V-2 according to UL94.

Classifications

ETIM 8.0	EC000897	ETIM 9.0	EC000897
ETIM 10.0	EC000897	ECLASS 14.0	27-25-01-19
ECLASS 15.0	27-25-01-19		

WPD 108 1X120/2X35+3X25+4X16 BK

Weidmüller Interface GmbH & Co. KG
Klingenbergstraße 26
D-32758 Detmold
Germany

www.weidmueller.com

Drawings

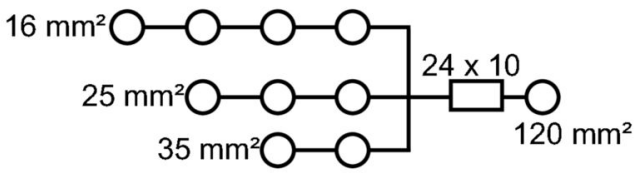

Conductor connection data according to IEC 60947-7-1 (Cu)

Input	connection point A Copper	connection point A Aluminum*	CP** B Copper
120 mm²	19 Nm	22,6 Nm	
95 mm²			
70 mm²	19 Nm		
50 mm²			
35 mm²			
25 mm²			
Flat band 24x10mm			3 Nm
Stripping lengths	27 mm		22 mm
Allen screw	M14		M6

* Values according to UL 1059 ** CP - connection point

Output	connection point 1 / 2 / 3 Copper	connection point 1 / 2 / 3 Aluminum*	connection point 4 / 5 / 6 / 7 Copper	connection point 4 / 5 / 6 / 7 Aluminum*	connection point 8 / 9 Copper	connection point 8 / 9 Aluminum*
35 mm²						
25 mm²						
16 mm²	2 Nm	5,1 Nm			2,5 Nm	11,3 Nm
10 mm²				5,1 Nm		
6 mm²		5,1 Nm	2 Nm			
4 mm²						
2,5 mm²			2 Nm		2,5 Nm	
1,5 mm²						
Stripping lengths	12 mm		12 mm		18 mm	
Allen screw	M6		M6		M8	

* Values according to UL 1059

Stranded Solid Flexible with ferrule Sector shaped Flat band

Conductor connection data according to UL 1059 (Al+Cu)

Certificate no. (UR)	XCFR2.E60693				
Input (line)	connection point A Copper		connection point A Aluminum		CP* B Copper
kcmil 250	168.2 Lb In.		200 Lb In.		
AWG 4/0		168.2 Lb In.		200 Lb In.	
AWG 3/0					
AWG 2/0					
AWG 1/0					
AWG 2					
AWG 4					
Flat band 24x10 mm					17.7 Lb In.
max. current	250 A	200 A	155 A	205 A	250 A
Voltage size B,C (UR)	600 V				

* CP - connection point

Output	connection point 1 / 2 / 3 Copper	connection point 1 / 2 / 3 Aluminum	connection point 4 / 5 / 6 / 7 Copper	connection point 4 / 5 / 6 / 7 Aluminum	connection point 8 / 9 Copper	connection point 8 / 9 Aluminum
AWG 2						
AWG 4						
AWG 6		45.1 Lb In.				100 Lb In.
AWG 8	22.6 Lb In.					
AWG 10		45.1 Lb In.				
AWG 12			22.6 Lb In.		53.1 Lb In.	
AWG 14		22.6 Lb In.		45.1 Lb In.		100 Lb In.
AWG 16			22.6 Lb In.		53.1 Lb In.	
max. current	85 A	65 A	65 A	50 A	115 A	85 A	90 A	65 A
Voltage size B,C (UR)	600 V					

Stranded Solid Flexible with ferrule Sector shaped Flat band

CSA rating data according to CSA 22.2 No. 158

Certificate No. (CSA)	269832			
	Input	Output		
	CP* A	CP* 1/2/3	CP* 4/5/6/7	CP* 8
kcmil 250	19 Nm.			
AWG 2	19 Nm			
AWG 2				
AWG 4				
AWG 6		3 Nm	3 Nm	6 Nm
AWG 8				
AWG 10				
AWG 12				
AWG 14				
AWG 16				
max. current	255 A	85 A	65 A	115 A
Voltage size C (CSA)	600 V			

* CP - connection point

Stranded Solid Flexible with ferrule Sector shaped Flat band

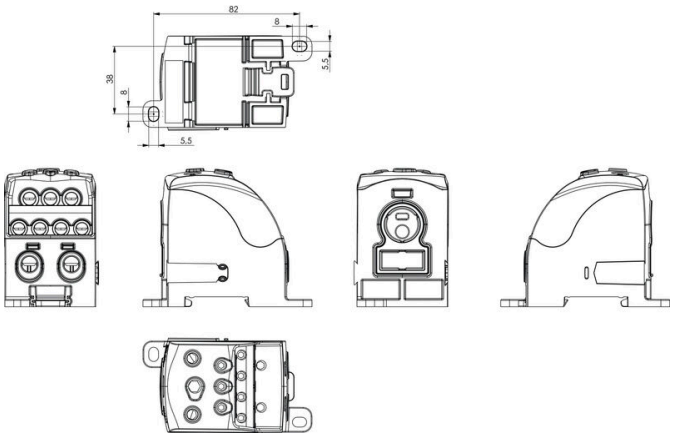

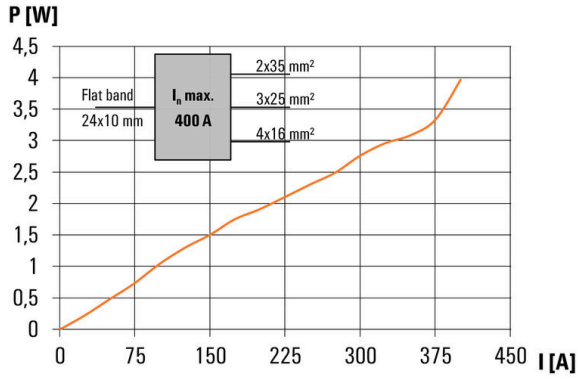

WPD 108 1X120/2X35+3X25+4X16 BK

Weidmüller Interface GmbH & Co. KG
Klingenbergstraße 26
D-32758 Detmold
Germany

www.weidmueller.com

Accessories

Socket wrench sets

Allen key made from fully hardened, high-alloy chromium-vanadium- steel, acc. to DIN ISO 2936 L (DIN 911), high-quality refined surface.

General ordering data

Type	SKS 2,0-8,0 MR	Version
Order No.	9008870000	socket wrenches
GTIN (EAN)	4032248266623	
Qty.	1 ST	

Slotted screwdriver

Slotted screwdriver with rounded blade SD DIN 5265, ISO 2380/2, output to DIN 5264, ISO 2380/1. ChromTop tip, SoftFinish grip

General ordering data

Type	SDS 0.6X3.5X100	Version
Order No.	9008330000	Screwdriver, Screwdriver
GTIN (EAN)	4032248056286	
Qty.	1 ST	

Cross-connections

The distribution or multiplication of a potential to adjoining terminal blocks is realized via a cross-connection. Additional wiring effort can be easily avoided. Even if the poles are broken out, contact reliability in the terminal blocks is still ensured. Our portfolio offers pluggable and screwable cross-connection systems for modular terminal blocks.

General ordering data

Type	WQB WPD X08-09/2	Version
Order No.	1561900000	Cross-connector (terminal), Plugged, grey, 353 A, Number of poles: 2,
GTIN (EAN)	4050118367096	Pitch in mm (P): 51.10, Insulated: Yes, Width: 74.6 mm
Qty.	3 ST	