Data sheet

S2C 2.5

Weidmüller Interface GmbH & Co. KG
Klingenbergstraße 26
D-32758 Detmold
Germany

www.weidmueller.com

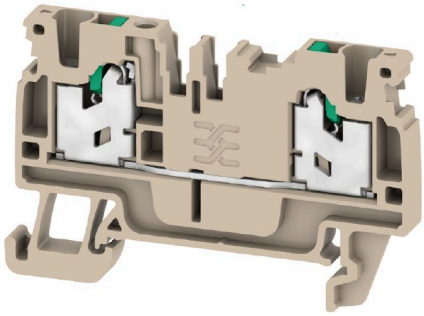

To feed through power, signal, and data is the classical requirement in electrical engineering and panel building. The insulating material, the connection system and the design of the terminal blocks are the differentiating features. A feed-through terminal block is suitable for joining and/or connecting one or more conductors. They could have one or more connection levels that are on the same potential or insulated against one another.

General ordering data

Version	Feed-through terminal block, SNAP IN, dark beige, 2.5 mm², 24 A, 800 V, Number of connections: 2
Order No.	2674530000
Type	S2C 2.5
GTIN (EAN)	4064675266389
Qty.	100 items

S2C 2.5

Weidmüller Interface GmbH & Co. KG
Klingenbergstraße 26
D-32758 Detmold
Germany

www.weidmueller.com

Technical data

Approvals

Approvals	
ROHS	Conform
UL File Number Search	UL Website
Certificate No. (cURus)	E60693
Certificate No. (cURusEX)	E184763

Dimensions and weights

Depth	38 mm	Depth (inches)	1.4961 inch
Height	59 mm	Height (inches)	2.3228 inch
Width	5.1 mm	Width (inches)	0.2008 inch
Net weight	8.45 g		

Temperatures

Storage temperature	-25 °C...55 °C	Ambient temperature	-5 °C
Continuous operating temp., min.	-60 °C	Continuous operating temp., max.	130 °C

Environmental Product Compliance

RoHS Compliance Status	Compliant without exemption
REACH SVHC	No SVHC above 0.1 wt%

Material data

Basic material	Wemid	Colour	dark beige
Colour of operational elements	green	UL 94 flammability rating	V-0

Rating data IECEx/ATEX

Certificate No. (ATEX)	TUEV22ATEX8925U	Certificate No. (IECEX)	IECEXTUR22.0073U
Max. voltage (ATEX)	550 V	Current (ATEX)	21 A
Wire cross section max. (ATEX)	2.5 mm²		

System specifications

End cover plate required	Yes	Number of potentials	1
Number of levels	1	Number of clamping points per level	2
Number of potentials per tier	1	Levels cross-connected internally	No
PE connection	No	Mounting rail	TS 35
N-function	No	PE function	No
PEN function	No		

Additional technical data

With snap-in pegs	No	Open sides	right
Snap-on	Yes	Type of fixing	Snap-on

Weidmüller Interface GmbH & Co. KG
Klingenbergstraße 26
D-32758 Detmold
Germany

www.weidmueller.com

Technical data

Explosion-tested version	No	Type of mounting	TS 35

CSA rating data

Wire cross section max. (CSA)	14 AWG	Voltage size C (CSA)	600 V
Current size C (CSA)	15 A	Certificate No. (CSA)	200039-8116541
Voltage size B (CSA)	600 V	Current size B (CSA)	15 A
Voltage size D (CSA)	600 V	Current size D (CSA)	5 A
Wire cross section min. (CSA)	20 AWG		

Conductors for clamping (additional connection)

Connection type, additional connection	SNAP IN

Conductors for clamping (rated connection)

Gauge to IEC 60947-1	A2	
Wire connection cross section AWG, max.	AWG 14	
Connection direction	top	
Stripping length	10 mm	
Type of connection	SNAP IN	
Number of connections	2	
Clamping range, max.	2.5 mm²	
Clamping range, min.	0.34 mm²	
Blade size	0.6 x 3.5 mm	
Wire connection cross section AWG, min.	AWG 22	
Wire connection cross-section, finely stranded with wire-end ferrules DIN 46228/4, max.	2.5 mm²	
Wire connection cross-section, finely stranded with wire-end ferrules DIN 46228/4, min.	0.34 mm²	
Wire connection cross-section, finely stranded with wire-end ferrules DIN 46228/1, max.	2.5 mm²	
Wire connection cross-section, finely stranded with wire-end ferrules DIN 46228/1, min.	0.34 mm²	
Wire connection cross section, finely stranded, max.	4 mm²	
Wire connection cross section, finely stranded, min.	0.34 mm²	
Connection cross-section, stranded, max.	2.5 mm²	
Connection cross-section, stranded, min.	0.34 mm²	
Twin wire-end ferrules, max.	0.75 mm²	
Twin wire-end ferrules, min.	0.5 mm²	
Wire connection cross-section, solid core, max.	2.5 mm²	
Wire connection cross-section, solid core, min.	0.34 mm²	
Connection cross-section, finely stranded, max.	2.5 mm²	
Connection cross-section, finely stranded, min.	0.34 mm²	
Tube length for wire-end ferrule with plastic collar acc. to cross-section	Cross-section, min.	0.25 mm²
	Cross-section, max.	0.34 mm²
	Tube length, min.	8 mm
	Tube length, max.	8 mm

Weidmüller Interface GmbH & Co. KG
Klingenbergstraße 26
D-32758 Detmold
Germany

www.weidmueller.com

Technical data

	Cross-section, min.	0.5 mm²
	Cross-section, max.	1 mm²
	Tube length, min.	8 mm
	Tube length, max.	12 mm
	Cross-section, min.	1.5 mm²
	Cross-section, max.	2.5 mm²
	Tube length, min.	10 mm
	Tube length, max.	12 mm
Tube length for wire-end ferrule without plastic collar acc. to cross-section	Cross-section, min.	0.5 mm²
	Cross-section, max.	1 mm²
	Tube length, min.	10 mm
	Tube length, max.	10 mm
	Cross-section, min.	1.5 mm²
	Cross-section, max.	2.5 mm²
	Tube length, min.	10 mm
	Tube length, max.	18 mm
Tube length for twin wire-end ferrule acc. to cross-section	Cross-section, min.	0.5 mm²
	Cross-section, max.	0.5 mm²
	Tube length, min.	8 mm
	Tube length, max.	12 mm
	Cross-section, min.	0.75 mm²
	Cross-section, max.	0.75 mm²
	Tube length, min.	18 mm
	Tube length, max.	18 mm

General

Wire connection cross section AWG, max.	AWG 14	Wire connection cross section AWG, min.	AWG 22
Standards	IEC 60947-7-1	Mounting rail	TS 35

Rating data

Rated cross-section	2.5 mm²	Rated voltage	800 V
Rated DC voltage	800 V	Nominal current	24 A
Current at maximum wires	24 A	Standards	IEC 60947-7-1
Volume resistance according to IEC 60947-7-x	1.33 mΩ	Rated impulse withstand voltage	8 kV
Power loss in accordance with IEC 60947-7-x	0.77 mW	Surge voltage category	III
Pollution severity	3		

UL rating data

Conductor size Factory wiring max. (cURus)	12 AWG	Voltage size B (cURus)	600 V
Voltage size D (cURus)	600 V	Certificate No. (cURus)	E60693
Conductor size Field wiring min. (cURus)	22 AWG	Conductor size Factory wiring min. (cURus)	22 AWG
Current size B (cURus)	20 A	Voltage size C (cURus)	600 V
Current size C (cURus)	20 A	Current size D (cURus)	5 A
Conductor size Field wiring max. (cURus)	12 AWG		

Classifications

ETIM 8.0	EC000897	ETIM 9.0	EC000897
ETIM 10.0	EC000897	ECLASS 14.0	27-25-01-01
ECLASS 15.0	27-25-01-01		

Weidmüller Interface GmbH & Co. KG
Klingenbergstraße 26
D-32758 Detmold
Germany

www.weidmueller.com
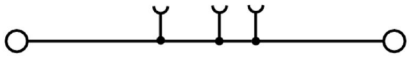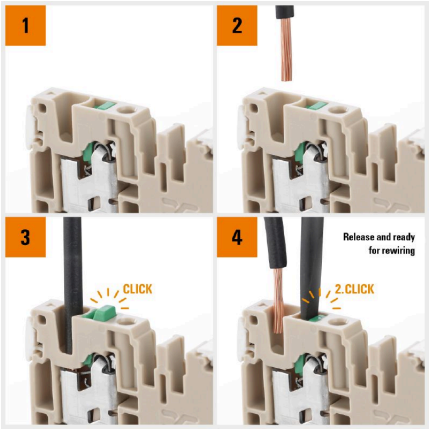
Drawings