Data sheet

TOS 24-230VUC EMPTY ED2

Weidmüller Interface GmbH & Co. KG
Klingenbergstraße 26
D-32758 Detmold
Germany

www.weidmueller.com

Product image

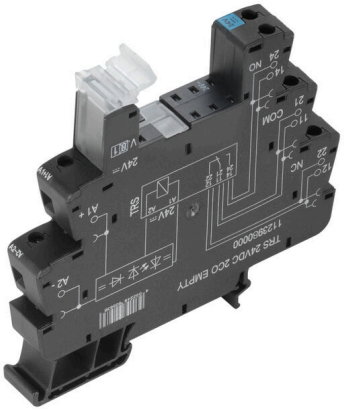

Similar to illustration

TERMSERIES empty sockets with:

- 1 CO contact
- Unique multi-voltage input from 24 to 230 V UC
- Input voltages from 5 V DC to 230 V UC with coloured marking: AC: red, DC: blue, UC: white
- Due to high-quality design and no sharp edges no risk of injuries during installation
- Partition plates for optical separation and reinforcement of insulation

General ordering data

Version	TERMSERIES, Relay socket, Rated control voltage: 24...230 V UC ±10 % , Rated switching voltage: 250 V AC, Continuous current: 16 A, Screw connection
Order No.	2662950000
Type	TOS 24-230VUC EMPTY ED2
GTIN (EAN)	4050118698121
Qty.	10 items

TOS 24-230VUC EMPTY ED2

Weidmüller Interface GmbH & Co. KG
Klingenbergstraße 26
D-32758 Detmold
Germany

www.weidmueller.com

Technical data

Approvals

Approvals	
ROHS	Conform
UL File Number Search	UL Website
Certificate No. (cURus)	E223759

Dimensions and weights

Depth	87.8 mm	Depth (inches)	3.4567 inch
Height	89.6 mm	Height (inches)	3.5276 inch
Width	12.8 mm	Width (inches)	0.5039 inch
Net weight	48 g		

Temperatures

Storage temperature	-40 °C...85 °C	Ambient temperature	-40 °C...60 °C
Operating temperature		Humidity	5-95% relative humidity, Tu = 40°C, without condensation

Environmental Product Compliance

RoHS Compliance Status	Compliant with exemption
RoHS Exemption (if applicable/known)	7a, 7cI
REACH SVHC	Lead 7439-92-1
SCIP	9e2cbc49-76d9-4611-b8ec-5b4f549a0aa9

Rated data UL

Ambient temperature (operational), max.	60 °C	Connection cross-section AWG, min.	AWG 26
Connection cross-section AWG, max.	AWG 14	Type of conductor	rigid copper conductor, flexible copper conductor
Tightening torque, max.	0.4 Nm	Pollution severity level	2
Certificate No. (cURus)	E223759		

Control side

Rated control voltage	24...230 V UC ±10 %	Status indicator	Green LED
Protective circuit	Rectifier	Coil voltage of the replacement relay deviating from the rated control voltage	Yes
Coil voltage of the replacement relay	24 V DC		

Load side

Rated switching voltage	250 V AC	Continuous current	16 A
Max. switching voltage, AC	250 V	Contact type	1 CO contact

General data

Operating altitude	≤ 2000 m, above sea level
Mounting rail	TS 35
Test button available	No
Mechanical switch position indicator	No

TOS 24-230VUC EMPTY ED2

Weidmüller Interface GmbH & Co. KG
Klingenbergstraße 26
D-32758 Detmold
Germany

www.weidmueller.com

Technical data

Colour	black	
UL94 flammability rating component	Component	Housing
	UL94 flammability rating	V-0
	Component	Retaining clip
	UL94 flammability rating	V-0

Insulation coordination

Rated voltage	300 V	Pollution severity	2
Surge voltage category	III	Clearance and creepage distances for control side - load side	≥ 6 mm
Dielectric strength for control side - load side	3.51 kVeff /1 min.	Type of isolation at input and output	reinforced insulation
Type of isolation at neighbouring contacts	Basic insulation	Dielectric strength to mounting rail	3.51 kVeff / 1 min.
Protection degree	IP20		

Further details of approvals / standards

Certificate No. (cURus)	E223759

Connection data

Wire connection method	Screw connection	Stripping length, rated connection	8 mm
Tightening torque, max.	0.4 Nm	Clamping range, rated connection	1.5 mm²
Clamping range, min.	0.14 mm²	Clamping range, max.	2.5 mm²
Wire connection cross section AWG, min.	AWG 26	Wire connection cross section AWG, max.	AWG 14
Wire cross-section, solid, min.	0.14 mm²	Wire cross-section, solid, max.	2.5 mm²
Wire cross-section, solid, min. (AWG)	AWG 26	Wire cross-section, solid, max. (AWG)	AWG 14
Wire connection cross section, finely stranded, min.	0.14 mm²	Wire connection cross section, finely stranded, max.	2.5 mm²
Wire cross-section, finely stranded, min. (AWG)	AWG 26	Wire cross-section, finely stranded, max. (AWG)	AWG 14
Wire connection cross-section, finely stranded with wire-end ferrules DIN 46228/4, min.	0.25 mm²	Wire connection cross-section, finely stranded with wire-end ferrules DIN 46228/4, max.	2.5 mm²
Conductor cross-section, flexible, AEH (DIN 46228-1), min.	0.25 mm²	Conductor cross-section, flexible, AEH (DIN 46228-1), max.	2.5 mm²
Wire connection cross section, finely stranded, two clampable wires, min.	0.5 mm²	Wire cross-section, finely stranded, two clampable wires, max.	1 mm²
Twin wire-end ferrules, min.	0.5 mm²	Twin wire-end ferrules, max.	1 mm²
Blade size	size PH0	Pitch in mm (P)	5.00 mm

Classifications

ETIM 8.0	EC001456	ETIM 9.0	EC001456
ETIM 10.0	EC001456	ECLASS 14.0	27-37-16-03
ECLASS 15.0	27-37-16-03		

TOS 24-230VUC EMPTY ED2

Weidmüller Interface GmbH & Co. KG
Klingenbergstraße 26
D-32758 Detmold
Germany

www.weidmueller.com

Drawings

Wiring diagram

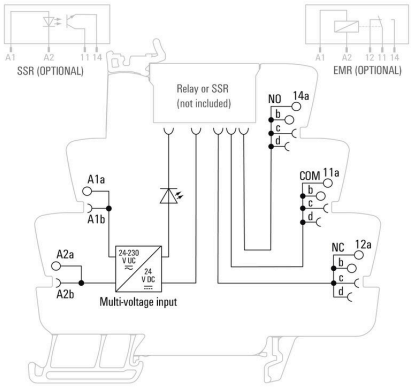

Dimensional drawing

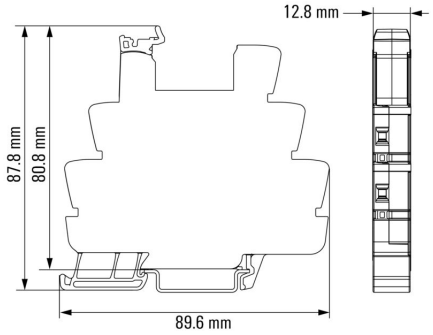

TOS 24-230VUC EMPTY ED2

Weidmüller Interface GmbH & Co. KG
Klingenbergstraße 26
D-32758 Detmold
Germany

www.weidmueller.com

Drawings

Miscellaneous

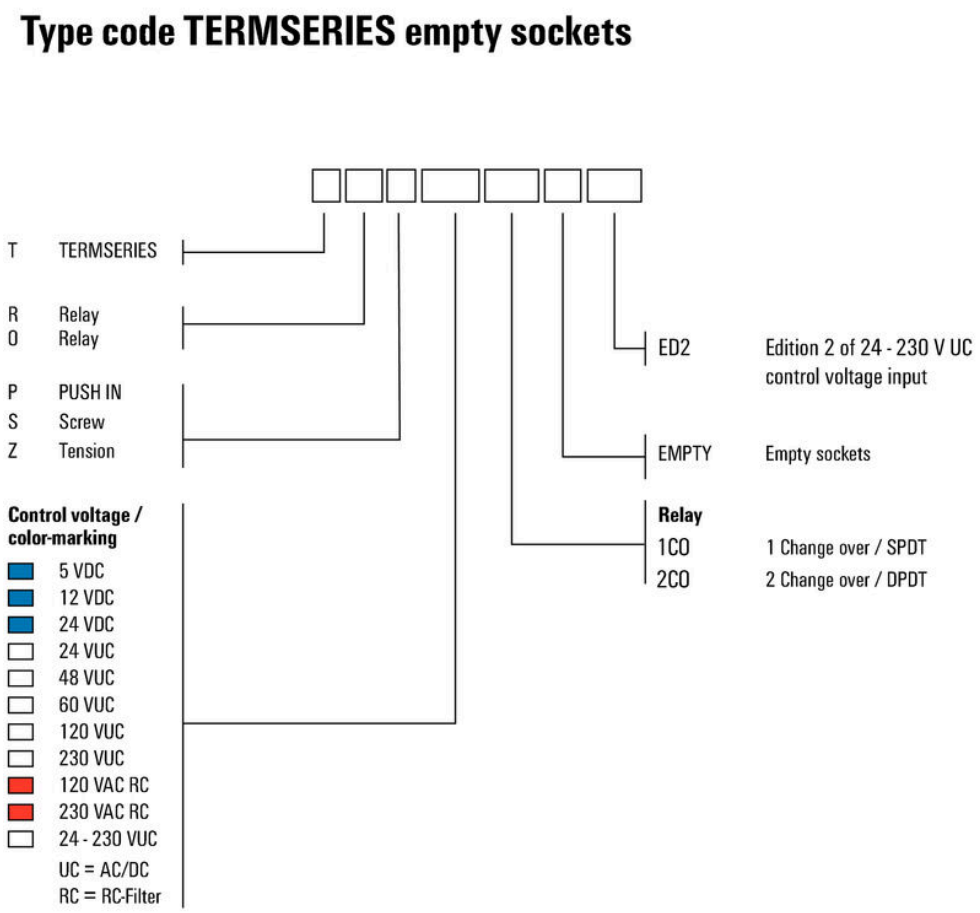

Type codes

TOS 24-230VUC EMPTY ED2

Weidmüller Interface GmbH & Co. KG
Klingenbergstraße 26
D-32758 Detmold
Germany

www.weidmueller.com

Accessories

Partition plate

Versatile separation plates
Separation plates can be used to group together signals visually, to electrically
isolate modules and to insert markings for a better overview. This makes
them a particularly versatile accessory. Separation plates increase the
clearance and creepage distances between two modules, thus increasing
the rated insulation voltage between two modules to up to 600 V. Double
separation plates can be marked with WAD5 or WS10/5 markers and
enable continuous cross-connections. Installation is made easier with the
perforations to individually break out the cross-connection channels.

- Partition plates visually separates groups from each other
- Indentations for individual breaking out the crosscconnection channels
- Partition plates isolates between two modules by increasing the clearance and creepage distances of up to 600 V

General ordering data

Type	TW TXS/TXZ R3.2	Version
Order No.	1240800000	TERMSERIES, Partition plate
GTIN (EAN)	4050118028188	
Qty.	10 ST	

Supply module

Space-saving supply modules
Our supply terminals enable potentials to be fed at the input – e.g.
neutral or minus potentials – or switched potentials to be fed at the output. In
conjunction with precisely fitting cross-connections from the TEMRSERIES,
the connections for the cables on the relay module remain free for actuators
or sensors. No additional feed-through terminal blocks are required, resulting
in huge space savings in the panel. At the same time, the wiring is simplified
as no double wire-end ferrules are required for the potential feed.

General ordering data

Type	TXP SUPPLY	Version
Order No.	2618940000	TERMSERIES, Supply module, Number of contacts: 5, , Continuous
GTIN (EAN)	4050118667592	current: 10 A, PUSH IN
Qty.	10 ST	

TOS 24-230VUC EMPTY ED2

Weidmüller Interface GmbH & Co. KG
Klingenbergstraße 26
D-32758 Detmold
Germany

www.weidmueller.com

Accessories

Type	TXS SUPPLY	Version
Order No.	1240780000	TERMSERIES, Supply module, Number of contacts: 5, , Continuous
GTIN (EAN)	4050118028140	current: 10 A, Screw connection
Qty.	10 ST	
Type	TXZ SUPPLY	Version
Order No.	1240790000	TERMSERIES, Supply module, Number of contacts: 5, , Continuous
GTIN (EAN)	4050118028164	current: 10 A, Tension-clamp connection
Qty.	10 ST	

Blank

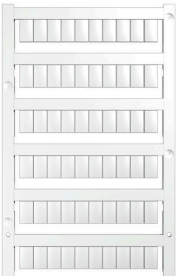

WS markers are the perfect match for the W-series connectors. Thanks to their system compatibility, the WS tags can also be used with the I-series and the Z-series. The large marking surfaces do not only permit long character strings but also multi-line text.
WS markers are ideal for labels with long, customised character strings. Thanks to the proven MultiCard format, printing with PrintJet CONNECT oder/or Plotter is possible.
• Can be fitted in strips or individually
• Markers in proven MultiCard format
For custom printing: Please send us a file of our labeling software M-Print PRO or M-Print PRO Online (without installation) for your labeling specifications.

General ordering data

Type	WS 10/6 M MC NE WS	Version
Order No.	1818400000	WS, Terminal marker, 10 x 6 mm, Pitch in mm (P): 6.00 Weidmueller,
GTIN (EAN)	4032248310876	Allen-Bradley, white
Qty.	600 ST	

ZQV

General ordering data

Type	ZQV 1.5N/R6.4/2 GE	Version
Order No.	1193670000	TERMSERIES, Cross-connector
GTIN (EAN)	4032248976638	
Qty.	10 ST	
Type	ZQV 1.5N/R6.4/10 GE	Version
Order No.	1193680000	TERMSERIES, Cross-connector
GTIN (EAN)	4032248976454	
Qty.	10 ST	

TOS 24-230VUC EMPTY ED2

Weidmüller Interface GmbH & Co. KG
Klingenbergstraße 26
D-32758 Detmold
Germany

www.weidmueller.com

Accessories

Type	ZQV 1.5N/R6.4/19 GE	Version
Order No.	1193690000	TERMSERIES, Cross-connector
GTIN (EAN)	4032248976645	
Qty.	10 ST	
Type	ZQV 1.5N/R6.4/2 BL	Version
Order No.	1446140000	TERMSERIES, Cross-connector
GTIN (EAN)	4050118251074	
Qty.	10 ST	
Type	ZQV 1.5N/R6.4/10 BL	Version
Order No.	1390350000	TERMSERIES, Cross-connector
GTIN (EAN)	4050118190793	
Qty.	10 ST	
Type	ZQV 1.5N/R6.4/19 BL	Version
Order No.	1391620000	TERMSERIES, Cross-connector
GTIN (EAN)	4050118191813	
Qty.	10 ST	
Type	ZQV 1.5N/R6.4/2 RT	Version
Order No.	1446090000	TERMSERIES, Cross-connector
GTIN (EAN)	4050118250886	
Qty.	10 ST	
Type	ZQV 1.5N/R6.4/10 RT	Version
Order No.	1391640000	TERMSERIES, Cross-connector
GTIN (EAN)	4050118191660	
Qty.	10 ST	
Type	ZQV 1.5N/R6.4/19 RT	Version
Order No.	1391610000	TERMSERIES, Cross-connector
GTIN (EAN)	4050118191783	
Qty.	10 ST	
Type	ZQV 1.5N/R6.4/2 SW	Version
Order No.	1446040000	TERMSERIES, Cross-connector
GTIN (EAN)	4050118251067	
Qty.	10 ST	
Type	ZQV 1.5N/R6.4/10 SW	Version
Order No.	1391630000	TERMSERIES, Cross-connector
GTIN (EAN)	4050118191776	
Qty.	10 ST	
Type	ZQV 1.5N/R6.4/19 SW	Version
Order No.	1391600000	TERMSERIES, Cross-connector
GTIN (EAN)	4050118191806	
Qty.	10 ST	

Crosshead screwdriver Phillips

Crosshead screwdriver, Phillips, SDK PH DIN 5262, ISO 8764/2-PH, output to ISO 8764-PH, ChromTop tip, SoftFinish grip

TOS 24-230VUC EMPTY ED2

Weidmüller Interface GmbH & Co. KG
Klingenbergstraße 26
D-32758 Detmold
Germany

www.weidmueller.com

Accessories

General ordering data

Type	SDK PH0 X 60	Version
Order No.	2749400000	Screwdriver, Blade width (B): 3 mm, 60 mm, Blade thickness (A): 0
GTIN (EAN)	4050118895629	
Qty.	1 ST	
Type	SDIK PH0 X 60	Version
Order No.	2749880000	Screwdriver, Blade width (B): 0 mm, 60 mm, Blade thickness (A): 0
GTIN (EAN)	4050118897081	
Qty.	1 ST	

Slotted screwdriver

Slotted screwdriver with rounded blade SD DIN 5265, ISO 2380/2, output to DIN 5264, ISO 2380/1. ChromTop tip, SoftFinish grip

General ordering data

Type	SDS 0.6X3.5X100	Version
Order No.	2749340000	Screwdriver, Blade width (B): 3.5 mm, Blade length: 100 mm, Blade
GTIN (EAN)	4050118895568	thickness (A): 0.6 mm
Qty.	1 ST	
Type	SDIS SLIM 0.6X3.5X100	Version
Order No.	2749610000	Mounting tool, Blade width (B): 3.5 mm, Blade length: 100 mm, Blade
GTIN (EAN)	4050118896350	thickness (A): 0.6 mm
Qty.	1 ST	

Cross-connections

Adjustable cross-connections
Increase the flexibility of your cross-connections. The TERMSERIES CROSS-CONNECTION (TCC) enables individually adjustable cross-connections with up to 51 poles. The maximum number of pluggable poles has been increased to 32 poles. The strip material can be shortened to the required length very easily. The cross-connectors convince thanks to their easy handling and visibility as well as their universal connection possibilities. An additional web prevents the spring from deforming during assembly.

- Individually adjustable cross-connection with 51 poles
- Additional bar to avoid deformation of the spring
- Increased cross-connection – up to 32 poles possible
- Vibration resistance

TOS 24-230VUC EMPTY ED2

Weidmüller Interface GmbH & Co. KG
Klingenbergstraße 26
D-32758 Detmold
Germany

www.weidmueller.com

Accessories

General ordering data

Type	TCC 6.4/51 RD	Version
Order No.	2556410000	TERMSERIES, Cross-connector
GTIN (EAN)	4050118566925	
Qty.	10 ST	
Type	TCC 6.4/51 OR	Version
Order No.	2556370000	TERMSERIES, Cross-connector
GTIN (EAN)	4050118566680	
Qty.	10 ST	
Type	TCC 6.4/51 BL	Version
Order No.	2556450000	TERMSERIES, Cross-connector
GTIN (EAN)	4050118566963	
Qty.	10 ST	
Type	TCC 6.4/51 BK	Version
Order No.	2556490000	TERMSERIES, Cross-connector
GTIN (EAN)	4050118567007	
Qty.	10 ST	
Type	TCC 6.4/2 OR	Version
Order No.	2556350000	TERMSERIES, Cross-connector
GTIN (EAN)	4050118566826	
Qty.	10 ST	
Type	TCC 6.4/2 BL	Version
Order No.	2556430000	TERMSERIES, Cross-connector
GTIN (EAN)	4050118566949	
Qty.	10 ST	
Type	TCC 6.4/2 BK	Version
Order No.	2556470000	TERMSERIES, Cross-connector
GTIN (EAN)	4050118566987	
Qty.	10 ST	
Type	TCC 6.4/10 RD	Version
Order No.	2556400000	TERMSERIES, Cross-connector
GTIN (EAN)	4050118566918	
Qty.	10 ST	
Type	TCC 6.4/10 OR	Version
Order No.	2556360000	TERMSERIES, Cross-connector
GTIN (EAN)	4050118566673	
Qty.	10 ST	
Type	TCC 6.4/10 BL	Version
Order No.	2556440000	TERMSERIES, Cross-connector
GTIN (EAN)	4050118566956	
Qty.	10 ST	
Type	TCC 6.4/10 BK	Version
Order No.	2556480000	TERMSERIES, Cross-connector
GTIN (EAN)	4050118566994	
Qty.	10 ST	
Type	TCC 12.8/26 RD	Version
Order No.	2556420000	TERMSERIES, Cross-connector
GTIN (EAN)	4050118566932	
Qty.	10 ST	
Type	TCC 12.8/26 OR	Version
Order No.	2556380000	TERMSERIES, Cross-connector
GTIN (EAN)	4050118566697	
Qty.	10 ST	

TOS 24-230VUC EMPTY ED2

Weidmüller Interface GmbH & Co. KG
Klingenbergstraße 26
D-32758 Detmold
Germany

www.weidmueller.com

Accessories

Type	TCC 12.8/26 BL	Version
Order No.	2556460000	TERMSERIES, Cross-connector
GTIN (EAN)	4050118566970	
Qty.	10 ST	
Type	TCC 12.8/26 BK	Version
Order No.	2556500000	TERMSERIES, Cross-connector
GTIN (EAN)	4050118567014	
Qty.	10 ST	
Type	TCC 6.4/2 RD	Version
Order No.	2556390000	TERMSERIES, Cross-connector
GTIN (EAN)	4050118566901	
Qty.	10 ST	

TERMSERIES interface adapter

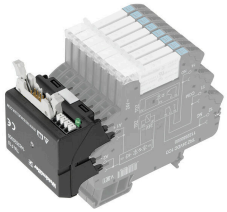

Faster signal wiring with less space
To reduce wiring times, pre-assembled cables are used between the control system and the interface level and are simply connected to the TERMSERIES adapter. This enables throughput times in electrical cabinet building to be significantly reduced. The adapter has a universal fit and offers a genuine space advantage in interaction with the TERMSERIES products with identical contours.

- Reduced wiring time due to plug-and-play concept with pre-assembled cables
- Can be applied to the input and output sides of the TERMSERIES
- Ready for plus and minus switching logic
- High space-saving due to universal fit to other TERMSERIES products

General ordering data

Type	TIAL F10	Version
Order No.	1463540000	TERMSERIES, Adapter, 10-pole plug according to DIN EN 60603-13,
GTIN (EAN)	4050118323559	long locking lever, Number of signal paths: 8, Rated voltage DC : 24 V,
Qty.	1 ST	Rated current (per signal path): 125 mA