Data sheet

TMS 5.08/15/90 3.0SN GN BX

Weidmüller Interface GmbH & Co. KG
Klingenbergstraße 26
D-32758 Detmold
Germany

www.weidmueller.com

General ordering data

Order No.	2651460000
Type	TMS 5.08/15/90 3.0SN GN BX
GTIN (EAN)	4050118635515
Qty.	64 items
Product data	IEC: 320 V / 15 A / 0.2 - 2.5 mm² UL: 300 V / 15 A / AWG 30 - AWG 12
Packaging	Box

TMS 5.08/15/90 3.0SN GN BX

Weidmüller Interface GmbH & Co. KG
Klingenbergstraße 26
D-32758 Detmold
Germany

www.weidmueller.com

Technical data

Approvals

Approvals	cULus
ROHS	Conform
UL File Number Search	UL Website
Certificate No. (cURus)	E60693

Dimensions and weights

Net weight	15.45 g

Environmental Product Compliance

RoHS Compliance Status	Compliant with exemption
RoHS Exemption (if applicable/known)	6c
REACH SVHC	Lead 7439-92-1
SCIP	e8ca8b50-189f-4e0d-bdaa-5c8b34abe5bd

System parameters

Product family	OMNIMATE basic – Series TMS	Wire connection method	Clamping yoke connection
Mounting onto the PCB	THT solder connection	Conductor outlet direction	90°
Pitch in mm (P)	5.08 mm	Pitch in inches (P)	0.200 "
Number of poles	15	Pin series quantity	1
Number of rows	1	Solder pin length (l)	3 mm
Solder pin dimensions	0.7 x 0.9mm	Solder eyelet hole diameter (D)	1.4 mm
Number of solder pins per pole	1	Screwdriver blade	0.6 x 3.5
Tightening torque, min.	0.5 Nm	Tightening torque, max.	0.55 Nm
Clamping screw	M 3	Stripping length	6 mm
L1 in mm	71.12 mm	L1 in inches	2.800 "
Protection degree	IP20		

Material data

Insulating material	PA	Colour	Pale green
Colour chart (similar)	RAL 6021	Insulating material group	I
Moisture Level (MSL)		UL 94 flammability rating	V-0
Contact material	Copper alloy	Contact surface	tinned
Tinning type	matt	Storage temperature, min.	-40 °C
Storage temperature, max.	70 °C	Operating temperature, min.	-40 °C
Operating temperature, max.	105 °C		

Conductors suitable for connection

Clamping range, min.	0.2 mm²	Clamping range, max.	2.5 mm²
Solid, min. H05(07) V-U	0.2 mm²	Solid, max. H05(07) V-U	2.5 mm²
Flexible, min. H05(07) V-K	0.2 mm²	Flexible, max. H05(07) V-K	2.5 mm²
w. plastic collar ferrule, DIN 46228 pt 4, min.	0.2 mm²	w. plastic collar ferrule, DIN 46228 pt 4, max.	1.5 mm²
w. wire end ferrule, DIN 46228 pt 1, min.	0.2 mm²	w. wire end ferrule, DIN 46228 pt 1, max.	1.5 mm²

TMS 5.08/15/90 3.0SN GN BX

Weidmüller Interface GmbH & Co. KG
Klingenbergstraße 26
D-32758 Detmold
Germany

www.weidmueller.com

Technical data

Rated data acc. to IEC

Rated current, min. number of poles (Tu=20°C)	15 A	Rated voltage for surge voltage class / pollution degree II/2	320 V
Rated voltage for surge voltage class / pollution degree III/2	250 V	Rated voltage for surge voltage class / pollution degree III/3	160 V
Rated impulse voltage for surge voltage class/ pollution degree II/2	2.5 kV	Rated impulse voltage for surge voltage class/ pollution degree III/2	2.5 kV
Rated impulse voltage for surge voltage class/ contamination degree III/3	2.5 kV		

Rated data acc. to UL 1059

Institute (cURus)	CURUS	Certificate No. (cURus)	E60693
Rated voltage (Use group B / UL 1059)	300 V	Rated voltage (Use group D / UL 1059)	300 V
Rated current (Use group B / UL 1059)	15 A	Rated current (Use group D / UL 1059)	10 A
Wire cross-section, AWG, min.	AWG 30	Wire cross-section, AWG, max.	AWG 12
Reference to approval values	Specifications are maximum values, details - see approval certificate.		

Packing

Packaging	Box	VPE length	170.00 mm
VPE width	135.00 mm	VPE height	50.00 mm

Important note

Notes	• Only compatible with OMNIMATE basic products • P on drawing = pitch • Rated current related to rated cross-section & min. No. of poles. • Rated data refer only to the component itself. Clearance and creepage distances to other components are to be designed in accordance with the relevant application standards. • In the case of a two-pole terminal, the insulating body must be held against the terminal when tightening the screw. • Long term storage of the product with average temperature of 50 °C and maximum humidity 70%, 36 months

Classifications

ETIM 8.0	EC002643	ETIM 9.0	EC002643
ETIM 10.0	EC002643	ECLASS 14.0	27-46-01-01
ECLASS 15.0	27-46-01-01		

TMS 5.08/15/90 3.0SN GN BX

Weidmüller Interface GmbH & Co. KG
Klingenbergstraße 26
D-32758 Detmold
Germany

www.weidmueller.com
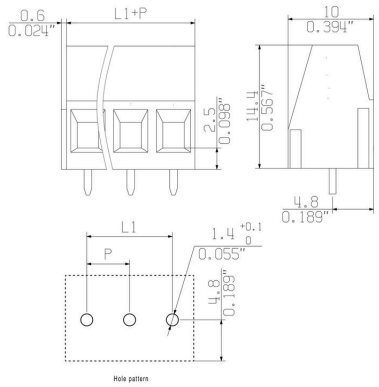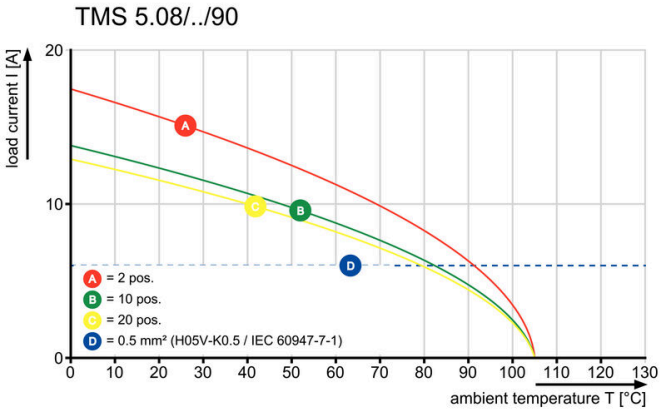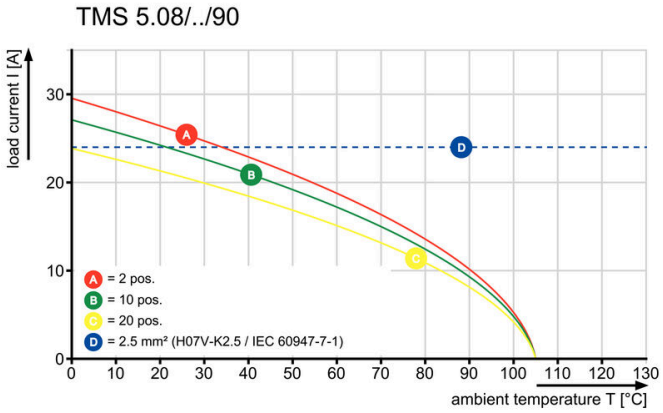
Drawings