Data sheet

VPU AC I 3+1 300/12.5 LCF

Weidmüller Interface GmbH & Co. KG
Klingenbergstraße 26
D-32758 Detmold
Germany

www.weidmueller.com

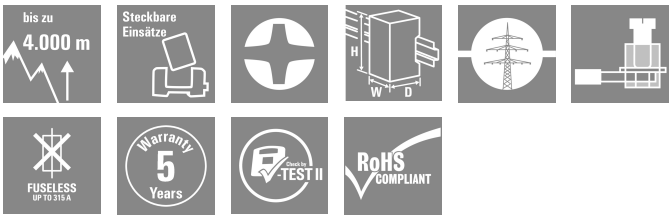

Weidmüller VPU I (Type I), VPU II (Type II) and VPU III (Type III) surge protection products effectively reduce the interference coupling that can occur due to transient surge voltages, even significantly below the limits prescribed by insulation co-ordination according to EN 60664-3 / DIN VDE 0110-3. This means that the whole installation is exposed to fewer malfunctions. The arresters are co-ordinated using technical means. This means that decoupling between Types I, II and III is unnecessary. The arresters are tested according to product standard IEC 61643-11 / DIN EN 61643-11 and can be installed in systems according to IEC 61643-12 / VDE 0675-6-12 and IEC 62305-4 / VDE 0185-4. This lightning and surge protection device is suited for installation in power supply systems. Weidmüller offers different products depending on the particular mains network type and voltage level. A special Type I and Type II protective device is even available for photovoltaic applications.

General ordering data

Version	Surge voltage arrester, Low voltage, Surge protection, TN-C-S, TN-S, TT, IT with N, IT without N
Order No.	2636910000
Type	VPU AC I 3+1 300/12.5 LCF
GTIN (EAN)	4050118679229
Qty.	1 items

VPU AC I 3+1 300/12.5 LCF

Weidmüller Interface GmbH & Co. KG
Klingenbergstraße 26
D-32758 Detmold
Germany

www.weidmueller.com

Technical data

Approvals

Approvals	
ROHS	Conform
UL File Number Search	UL Website
Certificate No. (cURus)	E3542610000

Dimensions and weights

Depth	91 mm	Depth (inches)	3.5827 inch
Height	90 mm	Height (inches)	3.5433 inch
Width	72 mm	Width (inches)	2.8346 inch
Net weight	647 g		

Temperatures

Storage temperature	-40 °C...85 °C	Ambient temperature	...85 °C
Operating temperature	-40 °C...85 °C	Humidity	5 - 95% rel. humidity

Environmental Product Compliance

RoHS Compliance Status	Compliant without exemption
REACH SVHC	No SVHC above 0.1 wt%

Rated data UL

Ambient temperature (operational), max.	85 °C	Rated Voltage UN	240 V
VPR (N-PE)	1800 V	MCOV (L-PE)	300 V
MCOV (N-PE)	305 V	In	20 kA
Category	SPD TYPE 4CA	Ambient temperature (operational), min.	-40 °C
Certificate No. (cURus)	E3542610000	MODE	all modes
Measured. Limiting Voltage	3020 V	VPR (L-L)	2440 V
VPR (L-N)	1220 V	VPR (L-PE)	3020 V
Voltage type	AC		

General data

Optical function display	green = OK; red = arrester is defective - replace	Segment	Power distribution
Version	Surge protection	Design	Installation housing; 4TE, Insta IP 20
UL 94 flammability rating	V-0	Colour	orange, black, blue
Suitable for	Count-in installation (leakage current free)	Protection degree	IP20 in installed state
Mounting rail	TS 35	Operating altitude	≤ 4000 m

Insulation coordination acc. to EN 50178

Surge voltage category	IV, III, II, I	Pollution severity	2

Rated data IEC / EN

Number of poles	4	Leakage current at Un	1 µA
Signalling contact	No	Rated voltage (AC)	230 V

VPU AC I 3+1 300/12.5 LCF

Weidmüller Interface GmbH & Co. KG
Klingenbergstraße 26
D-32758 Detmold
Germany

www.weidmueller.com

Technical data

Low voltage network	TN-C-S, TN-S, TT, IT with N, IT without N	Protection level Up at IN (N-PE)	≤ 1.5 kV
Voltage type	AC	Temporary surge voltage (over-voltage) - TOV	442 V
Fuse protection	No Fuse neccessary ≤315 A gG	Response time / fallback time	≤ 25 ns
Frequency range, max.	60 Hz	Frequency range, min.	50 Hz
Suitable for	Count-in installation (leakage current free)	Standards	IEC 61643-11, EN 61643-11, UL 1449
Lightning test current limp (10/350 µs) (L-PE)	12.5 kA	Lightning test current, limp (10/350 µs) (N-PE)	50 kA
Requirements class, acc. to EN 61643-11	T1, T2	Requirements category acc. to IEC 61643-11	Type I, Type II
Max. continuous voltage, Uc (AC)	300 V	Max. continuous voltage, Uc (N-PE)	305 V
Mains voltage	230 V / 400 V	Discharge current Imax (8/20µs) N-PE	50 kA
Discharge current In (8/20µs) N-PE	50 kA	Energy coordination (≤10 m)	Type I, Type II, Type III
Discharge current In (8/20µs) wire-PE	20 kA	Discharge current Imax (8/20µs) wire-PE	65 kA
Protection level Up at IN (L/N-PE)	≤ 1.5 kV	Short-circuit current rating ISCCR	50 kA
Follow-on current extinguishing capability Ifi	Not available due for technical reasons	Integrated back-up fuse	No

Connection data

Stripping length	18 mm	Wire connection method	Screw connection
Type of connection	Screw connection	Stripping length, rated connection	18 mm
Tightening torque, min.	3 Nm	Tightening torque, max.	4.5 Nm
Clamping range, rated connection	16 mm²	Clamping range, min.	1.5 mm²
Clamping range, max.	35 mm²	Wire cross-section, solid, min.	1.5 mm²
Wire cross-section, solid, max.	35 mm²	Wire connection cross section, finely stranded, min.	1.5 mm²
Wire connection cross section, finely stranded, max.	25 mm²	Connection cross-section, stranded, min.	1.5 mm²
Connection cross-section, stranded, max.	35 mm²		

Electrical data

Voltage type	AC

General data

Number of poles	4	Protection degree	IP20 in installed state
Colour	orange, black, blue		

Guarantee

Time interval	5 years

Important note

Product information	Only applicable to IT power systems where the earth on the distribution transformer is interconnected with the earth on the consumer side (RE=RA in Figure 44.A1 of IEC 60634-4-44:2018). For use in DC applications, please use the fuse of SIBA Type NH2XL aR/aSF DC 1500 V

Classifications

ETIM 8.0	EC001457	ETIM 9.0	EC001457
ETIM 10.0	EC001457	ECLASS 14.0	27-17-12-04
ECLASS 15.0	27-17-12-04		

VPU AC I 3+1 300/12.5 LCF

Weidmüller Interface GmbH & Co. KG
Klingenbergstraße 26
D-32758 Detmold
Germany

www.weidmueller.com

Drawings

Electric symbol

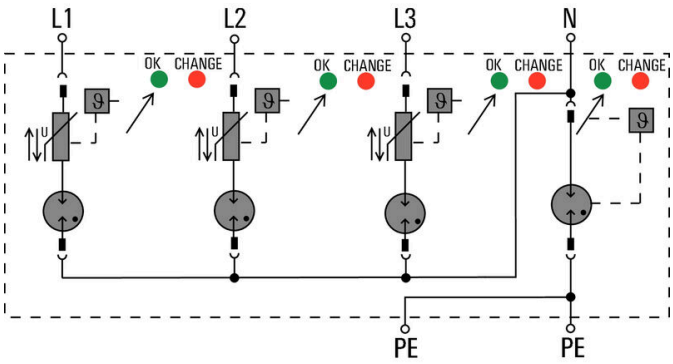

Schematic circuit diagram