Data sheet

SL 7.62IT/06/90MSF2 3.2SN BK BX

Weidmüller Interface GmbH & Co. KG
Klingenbergstraße 26
D-32758 Detmold
Germany

www.weidmueller.com

Product image

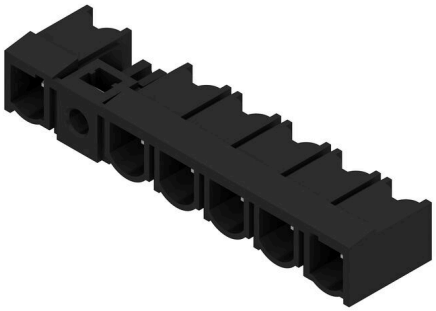

7.62

90° male header with soldered flange fastening with 7.62 pitch for 400 V IT power networks according to IEC 61800-5-1. UL approval as per UL840 600 V with leading PE contact.
Meets the increased requirements on touch safety for IT power networks as per IEC 61800-5-1 for 400 V to earth, when combined with female header BLZ 7.62 IT...,
Without a female header, the mating profile guarantees minimum touch safety of 1 mm with 20 N pressure on the test finger. The interlock in the middle flange reduces the space requirements in comparison with conventional solutions by one pitch width. On request: available with screw flange or without flange.

General ordering data

Version	PCB plug-in connector, male header, closed side / middle screw flange, THT solder connection, 7.62 mm, Number of poles: 6, 90°, Solder pin length (l): 3.2 mm, tinned, black, Box
Order No.	2629570000
Type	SL 7.62IT/06/90MSF2 3.2SN BK BX
GTIN (EAN)	4050118893700
Qty.	30 items
Product data	IEC: 630 V UL:
Packaging	Box
Delivery status	Discontinued

Creation date 08.03.2026 03:03:03 MEZ

SL 7.62IT/06/90MSF2 3.2SN BK BX

Weidmüller Interface GmbH & Co. KG
Klingenbergstraße 26
D-32758 Detmold
Germany

www.weidmueller.com

Technical data

Dimensions and weights

Depth	12.65 mm	Depth (inches)	0.498 inch
Height	11.6 mm	Height (inches)	0.4567 inch
Width	52.72 mm	Width (inches)	2.0756 inch
Net weight	4.55 g		

Environmental Product Compliance

RoHS Compliance Status	Compliant without exemption
REACH SVHC	No SVHC above 0.1 wt%

System specifications

Product family	OMNIMATE Power - series BL/SL 7.62IT	Type of connection	Board connection
Mounting onto the PCB	THT solder connection	Pitch in mm (P)	7.62 mm
Pitch in inches (P)	0.300 "	Outgoing elbow	90°
Number of poles	6	Number of solder pins per pole	1
Solder pin length (l)	3.2 mm	Solder pin dimensions	1.0 x 1.0 mm
Solder pin dimensions = d tolerance	+0,01 / -0,03 mm	Solder eyelet hole diameter (D)	1.4 mm
Solder eyelet hole diameter tolerance (D)	+ 0,1 mm	L1 in mm	45.72 mm
L1 in inches	1.800 "	Number of rows	1
Pin series quantity	1	Protection degree	IP20 in installed state
Tightening torque for screw flange, min.	0.15 Nm	Tightening torque for screw flange, max.	0.25 Nm
Plugging cycles	25		

Material data

Insulating material	PBT GF	Colour	black
Colour chart (similar)	RAL 9011	Moisture Level (MSL)	
UL 94 flammability rating	V-0	Contact material	Cu-alloy
Contact surface	tinned	Storage temperature, min.	-40 °C
Storage temperature, max.	70 °C	Operating temperature, min.	-50 °C
Operating temperature, max.	100 °C	Temperature range, installation, min.	-25 °C
Temperature range, installation, max.	100 °C		

Rated data acc. to IEC

Rated current, max. number of poles (Tu=20°C)	26 A	Rated current, min. number of poles (Tu=40°C)	25 A
Rated voltage for surge voltage class / pollution degree II/2	630 V	Rated voltage for surge voltage class / pollution degree III/2	500 V
Rated impulse voltage for surge voltage class/ pollution degree II/2	6000 V	Rated impulse voltage for surge voltage class/ pollution degree III/2	6 kV
Creepage distance, min.	8.1 mm	Clearance, min.	6.5 mm

Rated data acc. to UL 1059

Creepage distance, min.	11.2 mm	Clearance distance, min.	6.5 mm

Packing

Packaging	Box	VPE length	338.00 mm
VPE width	130.00 mm	VPE height	20.00 mm

SL 7.62IT/06/90MSF2 3.2SN BK BX

Weidmüller Interface GmbH & Co. KG
Klingenbergstraße 26
D-32758 Detmold
Germany

www.weidmueller.com

Technical data

Important note

IPC conformity	Conformity: The products are developed, manufactured and delivered according international recognized standards and norms and comply with the assured properties in the data sheet resp. fulfill decorative properties in accordance with IPC-A-610 "Class 2". Further claims on the products can be evaluated on request.
Notes	• Additional variants on request • Gold-plated contact surfaces on request • Rated current related to rated cross-section & min. No. of poles. • P on drawing = pitch • Rated data refer only to the component itself. Clearance and creepage distances to other components are to be designed in accordance with the relevant application standards. • In accordance with IEC 61984, OMNIMATE-connectors are connectors without breaking capacity (COC). During designated use, connectors are not allowed to be engaged or disengaged when live or under load • Long term storage of the product with average temperature of 50 °C and maximum humidity 70%, 36 months

Classifications

ETIM 8.0	EC002637	ETIM 9.0	EC002637
ETIM 10.0	EC002637	ECLASS 14.0	27-46-02-01
ECLASS 15.0	27-46-02-01		

SL 7.62IT/06/90MSF2 3.2SN BK BX

Weidmüller Interface GmbH & Co. KG
Klingenbergstraße 26
D-32758 Detmold
Germany

www.weidmueller.com

Drawings

Product image

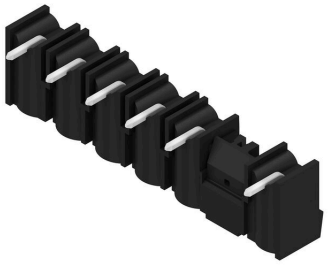

Dimensional drawing

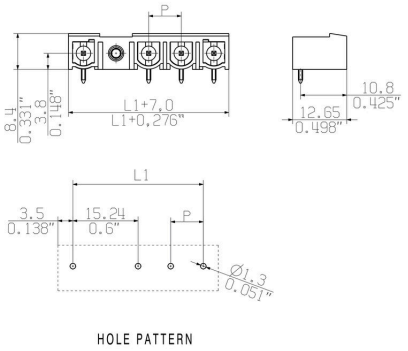

Similar to illustration

SL 7.62IT/06/90MSF2 3.2SN BK BX

Weidmüller Interface GmbH & Co. KG
Klingenbergstraße 26
D-32758 Detmold
Germany

www.weidmueller.com

Accessories

Coding elements



Only connects what is supposed to be connected: the right connection at the right place.
Coding elements and locking devices clearly assign connecting elements during the manufacturing process and operation
The coding elements and locking devices are inserted prior to assembly or during the cable assembly phase.
The Weidmüller alternative: configure online using the variant configurator to precode prior to delivery.
Incorrect assembly on the circuit board and incorrect plugging of connecting elements is no longer possible.
The advantage: no troubleshooting during manufacture and no operational errors by the user.

General ordering data

Type	BLZ/SL KO OR BX	Version
Order No.	1573010000	PCB plug-in connector, Accessories, Coding element, orange, Number
GTIN (EAN)	4008190048396	of poles: 1
Qty.	100 ST	
Type	BLZ/SL KO BK BX	Version
Order No.	1545710000	PCB plug-in connector, Accessories, Coding element, black, Number
GTIN (EAN)	4008190087142	of poles: 1
Qty.	50 ST	