Data sheet

# SU 10.16HP/06/90MF5 3.5AG BK BX

**Weidmüller Interface GmbH & Co. KG**
Klingenbergstraße 26
D-32758 Detmold
Germany

www.weidmueller.com

## Product image

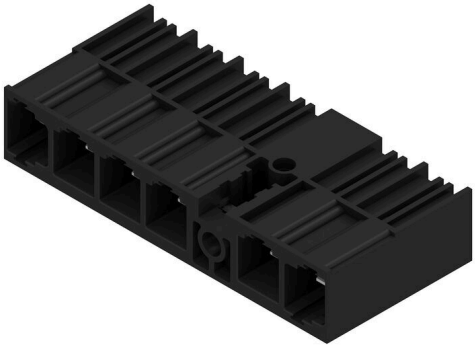

Single-row, high-current male header, for side-by-side mounting without sacrificing any poles, or with patented flange for fast locking without tools. Maximum connection and operating reliability thanks to a mating profile that prevents incorrect connection, with unique coding diversity and additional fastening in the flange. 3.5 mm pin length is optimised for wave soldering, plug-in direction 90° to solder pins.

### General ordering data

| | |
|---|---|
| Version | PCB plug-in connector, male header, closed side, Middle flange, THT solder connection, 10.16 mm, Number of poles: 6, 90°, Solder pin length (l): 3.5 mm, silver-plated, black, Box |
| Order No. | 2597270000 |
| Type | SU 10.16HP/06/90MF5 3.5AG BK BX |
| GTIN (EAN) | 4050118609431 |
| Qty. | 24 items |
| Product data | IEC: 1000 V / 78.3 A<br>UL: 300 V / 60 A |
| Packaging | Box |

# SU 10.16HP/06/90MF5 3.5AG BK BX

**Weidmüller Interface GmbH & Co. KG**
Klingenbergstraße 26
D-32758 Detmold
Germany

www.weidmueller.com

## Technical data

### Approvals

| | |
|---|---|
| ROHS | Conform |

### Dimensions and weights

| | |
|---|---|
| Net weight | 25.32 g |

### Environmental Product Compliance

| | |
|---|---|
| RoHS Compliance Status | Compliant without exemption |
| REACH SVHC | No SVHC above 0.1 wt% |

### System specifications

| | |
|---|---|
| Product family | OMNIMATE Power - series BU/SU 10.16HP |
| Type of connection | Board connection |
| Mounting onto the PCB | THT solder connection |
| Pitch in mm (P) | 10.16 mm |
| Pitch in inches (P) | 0.400 " |
| Outgoing elbow | 90° |
| Number of poles | 6 |
| Number of solder pins per pole | 3 |
| Solder pin length (l) | 3.5 mm |
| Solder pin length tolerance | +0.1 / -0.3 mm |
| Solder pin dimensions | 1.2 x 1.1 mm |
| Solder pin dimensions = d tolerance | +0.1 / -0.1 mm |
| Solder eyelet hole diameter (D) | 1.6 mm |
| Solder eyelet hole diameter tolerance (D) | + 0,1 mm |
| L1 in mm | 60.96 mm |
| L1 in inches | 2.400 " |
| Pin series quantity | 2 |
| Touch-safe protection acc. to DIN VDE 57 106 | Safe from finger touch, plugged |
| Touch-safe protection acc. to DIN VDE 0470 | IP20 plugged |
| Volume resistance | 2.00 mΩ |
| Can be coded | Yes |
| Tightening torque | Torque type: Mounting screw, PCB |

| | | | |
|---|---|---|---|
| Usage information | Thickness | min. | 1.44 mm |
| | | max. | 1.76 mm |
| | Tightening torque | min. | 0.25 Nm |
| | | max. | 0.3 Nm |
| | Recommended screw | Part number | SU 10.16 BFSC P 35X 14 |
| | Thickness | min. | 2.88 mm |
| | | max. | 3.52 mm |
| | Tightening torque | min. | 0.2 Nm |
| | | max. | 0.25 Nm |
| | Recommended screw | Part number | SU 10.16 BFSC P 35X 14 |
| | Thickness | min. | 1.44 mm |
| | | max. | 3.52 mm |
| | Tightening torque | min. | 0.8 Nm |
| | | max. | 0.9 Nm |

# SU 10.16HP/06/90MF5 3.5AG BK BX

**Weidmüller Interface GmbH & Co. KG**
Klingenbergstraße 26
D-32758 Detmold
Germany

www.weidmueller.com

## Technical data

| | | Recommended screw | Part number | SU 10.16 BFSC S 35X12 |
|---|---|---|---|---|

### Material data

| | | | |
|---|---|---|---|
| Insulating material | PBT GF | Colour | black |
| Colour chart (similar) | RAL 9011 | Insulating material group | IIIa |
| Comparative Tracking Index (CTI) | ≥ 200 | Moisture Level (MSL) | |
| UL 94 flammability rating | V-0 | Contact material | Cu-alloy |
| Contact surface | silver-plated | Layer structure of solder connection | ≥ 3 µm Ag |
| Layer structure of plug contact | ≥ 3 µm Ag | Storage temperature, min. | -40 °C |
| Storage temperature, max. | 70 °C | Operating temperature, min. | -50 °C |
| Operating temperature, max. | 120 °C | Temperature range, installation, min. | -25 °C |
| Temperature range, installation, max. | 120 °C | | |

### Rated data acc. to IEC

| | | | |
|---|---|---|---|
| tested acc. to standard | IEC 60664-1, IEC 61984 | Rated current, min. number of poles (Tu=20°C) | 78.3 A |
| Rated current, max. number of poles (Tu=20°C) | 67.9 A | Rated current, min. number of poles (Tu=40°C) | 70.6 A |
| Rated current, max. number of poles (Tu=40°C) | 61.3 A | Rated voltage for surge voltage class / pollution degree II/2 | 1000 V |
| Rated voltage for surge voltage class / pollution degree III/2 | 1000 V | Rated voltage for surge voltage class / pollution degree III/3 | 690 V |
| Rated impulse voltage for surge voltage class/ pollution degree II/2 | 6 kV | Rated impulse voltage for surge voltage class/ pollution degree III/2 | 8 kV |
| Rated impulse voltage for surge voltage class/ contamination degree III/3 | 8 kV | Short-time withstand current resistance | 3 x 1s mit 1000 A |
| Creepage distance, min. | 10.5 mm | Clearance, min. | 8.9 mm |

### Rated data acc. to CSA

| | | | |
|---|---|---|---|
| Rated voltage (Use group B / CSA) | 300 V | Rated voltage (Use group C / CSA) | 300 V |
| Rated voltage (Use group D / CSA) | 600 V | Rated current (Use group B / CSA) | 60 A |
| Rated current (Use group C / CSA) | 60 A | Rated current (Use group D / CSA) | 5 A |

### Rated data acc. to UL 1059

| | | | |
|---|---|---|---|
| Rated voltage (Use group B / UL 1059) | 300 V | Rated voltage (Use group C / UL 1059) | 300 V |
| Rated voltage (Use group D / UL 1059) | 600 V | Rated current (Use group B / UL 1059) | 60 A |
| Rated current (Use group C / UL 1059) | 60 A | Rated current (Use group D / UL 1059) | 5 A |
| Creepage distance, min. | 10.5 mm | Clearance distance, min. | 8.9 mm |

### Packing

| | | | |
|---|---|---|---|
| Packaging | Box | VPE length | 338.00 mm |
| VPE width | 130.00 mm | VPE height | 44.00 mm |

### Important note

| | |
|---|---|
| IPC conformity | Conformity: The products are developed, manufactured and delivered according international recognized standards and norms and comply with the assured properties in the data sheet resp. fulfill decorative properties in accordance with IPC-A-610 "Class 2". Further claims on the products can be evaluated on request. |
| Notes | • Additional variants on request<br>• Rated current related to rated cross-section & min. No. of poles.<br>• P on drawing = pitch |

## SU 10.16HP/06/90MF5 3.5AG BK BX

**Weidmüller Interface GmbH & Co. KG**
Klingenbergstraße 26
D-32758 Detmold
Germany

www.weidmueller.com

# Technical data

- Rated data refer only to the component itself. Clearance and creepage distances to other components are to be designed in accordance with the relevant application standards.
- For all applications with flange we recommend to fix the pin header with the help of the soldering flange or a self-tapping screw on the board.
- In accordance with IEC 61984, OMNIMATE-connectors are connectors without breaking capacity (COC). During designated use, connectors are not allowed to be engaged or disengaged when live or under load
- Long term storage of the product with average temperature of 50 °C and maximum humidity 70%, 36 months

### Classifications

| | | | |
|---|---|---|---|
| ETIM 8.0 | EC002637 | ETIM 9.0 | EC002637 |
| ETIM 10.0 | EC002637 | ECLASS 14.0 | 27-46-02-01 |
| ECLASS 15.0 | 27-46-02-01 | | |

# SU 10.16HP/06/90MF5 3.5AG BK BX

**Weidmüller Interface GmbH & Co. KG**
Klingenbergstraße 26
D-32758 Detmold
Germany

www.weidmueller.com

## Drawings

### Product image

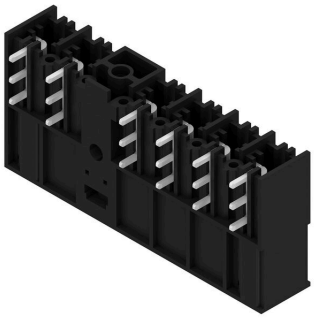

### Dimensional drawing

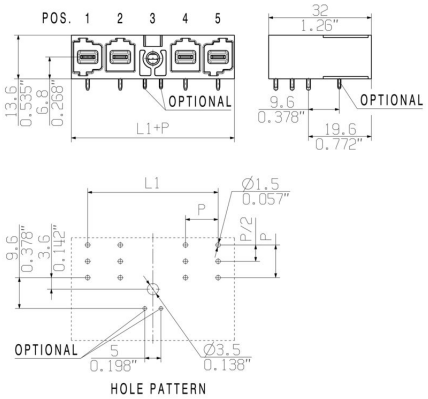


### Graph

| | | | | | | | | |
|---|---|---|---|---|---|---|---|---|
| 6 | M(S)F6 | o | o | o | o | o | X | o |
| 6 | M(S)F5 | o | o | o | o | X | o | o |
| 6 | M(S)F4 | o | o | o | X | o | o | o |
| 6 | M(S)F3 | o | o | X | o | o | o | o |
| 6 | M(S)F2 | o | X | o | o | o | o | o |
| 5 | M(S)F5 | o | o | o | o | X | o | |
| 5 | M(S)F4 | o | o | o | X | o | o | |
| 5 | M(S)F3 | o | o | X | o | o | o | |
| 5 | M(S)F2 | o | X | o | o | o | o | |
| 4 | M(S)F4 | o | o | o | X | o | | |
| 4 | M(S)F3 | o | o | X | o | o | | |
| 4 | M(S)F2 | o | X | o | o | o | | |
| 3 | M(S)F3 | o | o | X | o | | | |
| 3 | M(S)F2 | o | X | o | o | | | |
| 2 | M(S)F2 | o | X | o | | | | |
| **No of poles** | **X = middle flange position** | **1** | **2** | **3** | **4** | **5** | **6** | **7** |
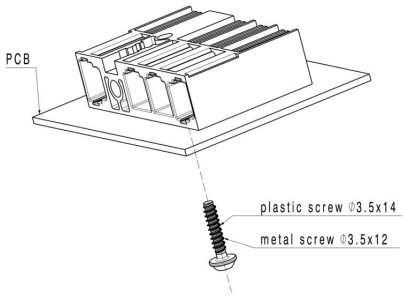
### Example of use