Data sheet

VCG 24V EX 2 M20X1.5

Weidmüller Interface GmbH & Co. KG
Klingenbergstraße 26
D-32758 Detmold
Germany

www.weidmueller.com

VARITECTOR Cable Gland (VCG) protects intrinsically safe circuits in IP67 applications

- Tested in accordance with IEC/EN 61643-21
- Suitable for use in EX areas
- High protection class with IP67
- Screw-in housing with different threads
- HART-compatible

General ordering data

Order No.	2593140000
Type	VCG 24V EX 2 M20X1.5
GTIN (EAN)	4050118605129
Qty.	1 items

VCG 24V EX 2 M20X1.5

Weidmüller Interface GmbH & Co. KG
Klingenbergstraße 26
D-32758 Detmold
Germany

www.weidmueller.com

Technical data

Approvals

Approvals	ATEX CCC IECEx
ROHS	Conform

Dimensions and weights

Height of lowest version	54 mm	Width	28 mm
Width (inches)	1.1024 inch	Length	78 mm
Length (inches)	3.0709 inch	Diameter	28 mm
Net weight	180 g		

Temperatures

Storage temperature	-30 °C...60 °C	Operating temperature	-30 °C...60 °C

Environmental Product Compliance

RoHS Compliance Status	Compliant
REACH SVHC	No SVHC above 0.1 wt%

Protection Ex - Data

ATEX - dust labelling	IEC Ex BAS 18.0085X, Ex ia IIIC T85 °C Da, (-30 °C≤Ta≤50 °C)	ATEX - gas labelling	18ATEX0141X, II 1GD, Ex ia II T6 Ga, (-30 °C≤Ta≤50 °C)
Input power, max. PI	2 W	Input current, max. Ii	0.8 A
Internal capacity, max. CI	0 nF	Internal inductance, max. LI	60 µH

General data

Segment	Measurement - Monitoring - Setting	Version	Stainless steel screw mounting housing
Colour	silver	Protection degree	IP67
FIELD BUS FOUNDATION BUS H1 compatible	According to IEC 61158-2		

Rated data IEC / EN

Rated voltage (AC)	24 V	Rated voltage (DC), max.	33 V
Response time / fallback time	< 1 ns	Frequency range, min.	0 Hz
Dielectric strength at FG against PE	≥ 500 V	Lightning test current, limp (10/350 µs) wire-wire	1 kA
Lightning test current, limp (10/350 µs) Wire-PE	1 kA	Rated load current IL	800 mA
Discharge current In (8/20µs) wire-wire	5 kA	Discharge current Imax (8/20µs) wire-PE	10 kA
Discharge current Imax (8/20µs) wire-wire	10 kA		

Connection data

Cross-section	1 mm²	Wire connection method	Cable length: 250 mm (min.)
Type of connection	Screw connection		

VCG 24V EX 2 M20X1.5

Weidmüller Interface GmbH & Co. KG
Klingenbergstraße 26
D-32758 Detmold
Germany

www.weidmueller.com

Technical data

General data

Protection degree	IP67	Colour	silver

Ratings IECEx/ATEX/cUL

ATEX - dust labelling	IEC Ex BAS 18.0085X, Ex ia IIIC T85 °C Da, (-30 °C≤Ta≤50 °C)	ATEX - gas labelling	18ATEX0141X, II 1GD, Ex ia II T6 Ga, (-30 °C≤Ta≤50 °C)

Guarantee

Time interval	5 years

Classifications

ETIM 8.0	EC000943	ETIM 9.0	EC000943
ETIM 10.0	EC000943	ECLASS 14.0	27-17-15-02
ECLASS 15.0	27-17-15-02		

VCG 24V EX 2 M20X1.5

Weidmüller Interface GmbH & Co. KG
Klingenbergstraße 26
D-32758 Detmold
Germany

www.weidmueller.com

Drawings

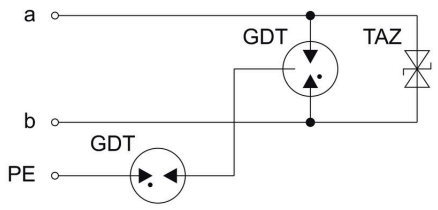
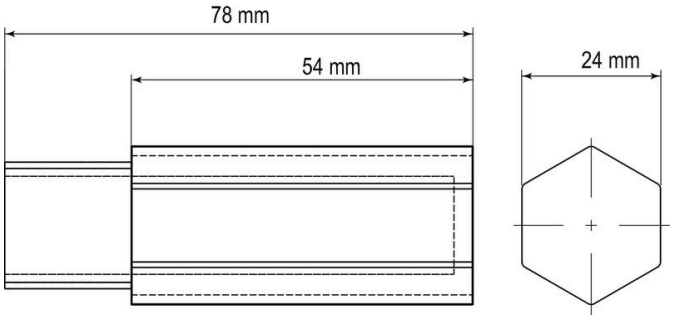
Similar to illustration