Data sheet

SU 10.16HP/03/90MF2 3.5AG BK BX

Weidmüller Interface GmbH & Co. KG
Klingenbergstraße 26
D-32758 Detmold
Germany

www.weidmueller.com

Product image

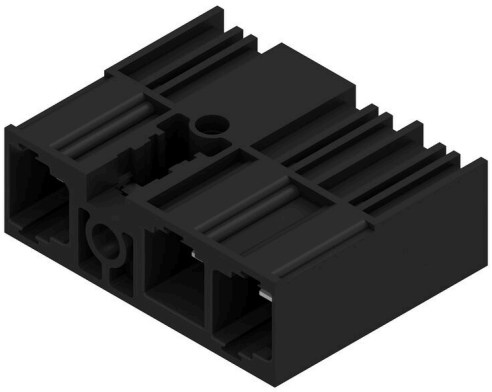

Single-row, high-current male header, for side-by-side mounting without sacrificing any poles, or with patented flange for fast locking without tools. Maximum connection and operating reliability thanks to a mating profile that prevents incorrect connection, with unique coding diversity and additional fastening in the flange. 3.5 mm pin length is optimised for wave soldering, plug-in direction 90° to solder pins.

General ordering data

Version	PCB plug-in connector, male header, closed side, Middle flange, THT solder connection, 10.16 mm, Number of poles: 3, 90°, Solder pin length (l): 3.5 mm, silver-plated, black, Box
Order No.	2580390000
Type	SU 10.16HP/03/90MF2 3.5AG BK BX
GTIN (EAN)	4050118589344
Qty.	42 items
Product data	IEC: 1000 V / 78.3 A UL: 300 V / 60 A
Packaging	Box

SU 10.16HP/03/90MF2 3.5AG BK BX

Weidmüller Interface GmbH & Co. KG
Klingenbergstraße 26
D-32758 Detmold
Germany

www.weidmueller.com

Technical data

Approvals

ROHS	Conform

Dimensions and weights

Net weight	14.05 g

Environmental Product Compliance

RoHS Compliance Status	Compliant without exemption
REACH SVHC	No SVHC above 0.1 wt%

System specifications

Product family	OMNIMATE Power - series BU/SU 10.16HP
Type of connection	Board connection
Mounting onto the PCB	THT solder connection
Pitch in mm (P)	10.16 mm
Pitch in inches (P)	0.400 "
Outgoing elbow	90°
Number of poles	3
Number of solder pins per pole	3
Solder pin length (l)	3.5 mm
Solder pin length tolerance	+0.1 / -0.3 mm
Solder pin dimensions	1.2 x 1.1 mm
Solder pin dimensions = d tolerance	+0.1 / -0.1 mm
Solder eyelet hole diameter (D)	1.6 mm
Solder eyelet hole diameter tolerance (D)	+ 0,1 mm
L1 in mm	30.48 mm
L1 in inches	1.200 "
Pin series quantity	2
Touch-safe protection acc. to DIN VDE 57 106	Safe from finger touch, plugged
Touch-safe protection acc. to DIN VDE 0470	IP20 plugged
Volume resistance	2.00 mΩ
Can be coded	Yes
Tightening torque	Torque type: Mounting screw, PCB

Usage information			
	Thickness	min.	1.44 mm
		max.	1.76 mm
	Tightening torque	min.	0.25 Nm
		max.	0.3 Nm
	Recommended screw	Part number	SU 10.16 BFSC P 35X 14
	Thickness	min.	2.88 mm
		max.	3.52 mm
	Tightening torque	min.	0.2 Nm
		max.	0.25 Nm
	Recommended screw	Part number	SU 10.16 BFSC P 35X 14
	Thickness	min.	1.44 mm
		max.	3.52 mm
	Tightening torque	min.	0.8 Nm
		max.	0.9 Nm

SU 10.16HP/03/90MF2 3.5AG BK BX

Weidmüller Interface GmbH & Co. KG
Klingenbergstraße 26
D-32758 Detmold
Germany

www.weidmueller.com

Technical data

		Recommended screw	Part number	SU 10.16 BFSC S 35X12

Material data

Insulating material	PBT GF	Colour	black
Colour chart (similar)	RAL 9011	Insulating material group	IIIa
Comparative Tracking Index (CTI)	≥ 200	Moisture Level (MSL)	
UL 94 flammability rating	V-0	Contact material	Cu-alloy
Contact surface	silver-plated	Layer structure of solder connection	≥ 3 µm Ag
Layer structure of plug contact	≥ 3 µm Ag	Storage temperature, min.	-40 °C
Storage temperature, max.	70 °C	Operating temperature, min.	-50 °C
Operating temperature, max.	120 °C	Temperature range, installation, min.	-25 °C
Temperature range, installation, max.	120 °C		

Rated data acc. to IEC

tested acc. to standard	IEC 60664-1, IEC 61984	Rated current, min. number of poles (Tu=20°C)	78.3 A
Rated current, max. number of poles (Tu=20°C)	67.9 A	Rated current, min. number of poles (Tu=40°C)	70.6 A
Rated current, max. number of poles (Tu=40°C)	61.3 A	Rated voltage for surge voltage class / pollution degree II/2	1000 V
Rated voltage for surge voltage class / pollution degree III/2	1000 V	Rated voltage for surge voltage class / pollution degree III/3	690 V
Rated impulse voltage for surge voltage class/ pollution degree II/2	6 kV	Rated impulse voltage for surge voltage class/ pollution degree III/2	8 kV
Rated impulse voltage for surge voltage class/ contamination degree III/3	8 kV	Short-time withstand current resistance	3 x 1s mit 1000 A
Creepage distance, min.	10.5 mm	Clearance, min.	8.9 mm

Rated data acc. to CSA

Rated voltage (Use group B / CSA)	300 V	Rated voltage (Use group C / CSA)	300 V
Rated voltage (Use group D / CSA)	600 V	Rated current (Use group B / CSA)	60 A
Rated current (Use group C / CSA)	60 A	Rated current (Use group D / CSA)	5 A

Rated data acc. to UL 1059

Rated voltage (Use group B / UL 1059)	300 V	Rated voltage (Use group C / UL 1059)	300 V
Rated voltage (Use group D / UL 1059)	600 V	Rated current (Use group B / UL 1059)	60 A
Rated current (Use group C / UL 1059)	60 A	Rated current (Use group D / UL 1059)	5 A
Creepage distance, min.	10.5 mm	Clearance distance, min.	8.9 mm

Packing

Packaging	Box	VPE length	338.00 mm
VPE width	130.00 mm	VPE height	44.00 mm

Important note

IPC conformity	Conformity: The products are developed, manufactured and delivered according international recognized standards and norms and comply with the assured properties in the data sheet resp. fulfill decorative properties in accordance with IPC-A-610 "Class 2". Further claims on the products can be evaluated on request.
Notes	• Additional variants on request • Rated current related to rated cross-section & min. No. of poles. • P on drawing = pitch

SU 10.16HP/03/90MF2 3.5AG BK BX

Weidmüller Interface GmbH & Co. KG
Klingenbergstraße 26
D-32758 Detmold
Germany

www.weidmueller.com

Technical data

- Rated data refer only to the component itself. Clearance and creepage distances to other components are to be designed in accordance with the relevant application standards.
- For all applications with flange we recommend to fix the pin header with the help of the soldering flange or a self-tapping screw on the board.
- In accordance with IEC 61984, OMNIMATE-connectors are connectors without breaking capacity (COC). During designated use, connectors are not allowed to be engaged or disengaged when live or under load
- Long term storage of the product with average temperature of 50 °C and maximum humidity 70%, 36 months

Classifications

ETIM 8.0	EC002637	ETIM 9.0	EC002637
ETIM 10.0	EC002637	ECLASS 14.0	27-46-02-01
ECLASS 15.0	27-46-02-01		

SU 10.16HP/03/90MF2 3.5AG BK BX

Weidmüller Interface GmbH & Co. KG
Klingenbergstraße 26
D-32758 Detmold
Germany

www.weidmueller.com

Drawings

Product image

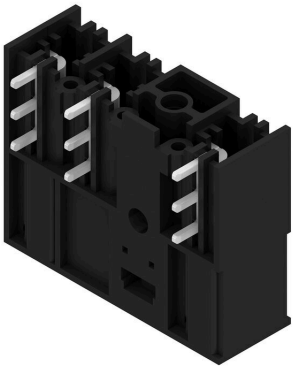

Dimensional drawing

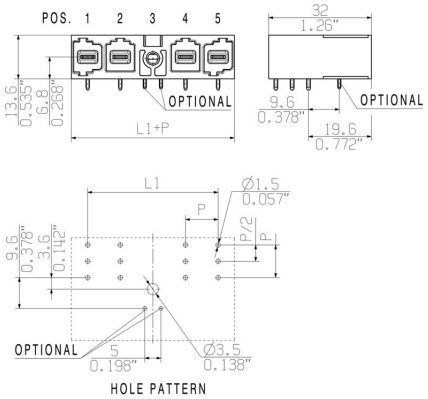

Graph

6	M(S)F6	o	o	o	o	o	X	o
6	M(S)F5	o	o	o	o	X	o	o
6	M(S)F4	o	o	o	X	o	o	o
6	M(S)F3	o	o	X	o	o	o	o
6	M(S)F2	o	X	o	o	o	o	o
5	M(S)F5	o	o	o	o	X	o	
5	M(S)F4	o	o	o	X	o	o	
5	M(S)F3	o	o	X	o	o	o	
5	M(S)F2	o	X	o	o	o	o	
4	M(S)F4	o	o	o	X	o		
4	M(S)F3	o	o	X	o	o		
4	M(S)F2	o	X	o	o	o		
3	M(S)F3	o	o	X	o			
3	M(S)F2	o	X	o	o			
2	M(S)F2	o	X	o				
No of poles	**X = middle flange position**	**1**	**2**	**3**	**4**	**5**	**6**	**7**
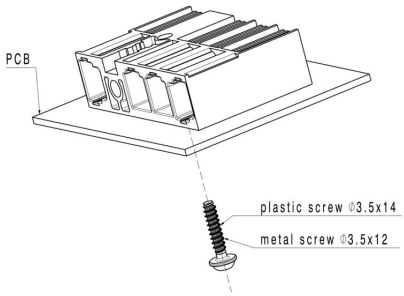
Example of use