Data sheet

SAK 2.5/35 DBL

Weidmüller Interface GmbH & Co. KG
Klingenbergstraße 26
D-32758 Detmold
Germany

www.weidmueller.com

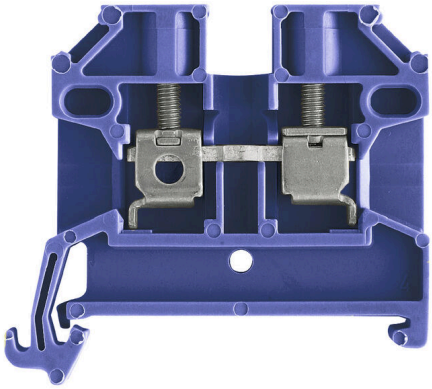

To feed through power, signal, and data is the classical requirement in electrical engineering and panel building. The insulating material, the connection system and the design of the terminal blocks are the differentiating features. A feed-through terminal block is suitable for joining and/or connecting one or more conductors. They could have one or more connection levels that are on the same potential or insulated against one another.

General ordering data

Version	Feed-through terminal block, Dark Blue, 2.5 mm², 24 A, Number of connections: 2
Order No.	2566540000
Type	SAK 2.5/35 DBL
GTIN (EAN)	4050118576306
Qty.	100 items
Delivery status	Discontinued
Available until	2023-12-31T00:00:00+01:00
Alternative product	WDU 2.5 BL

SAK 2.5/35 DBL

Weidmüller Interface GmbH & Co. KG
Klingenbergstraße 26
D-32758 Detmold
Germany

www.weidmueller.com

Technical data

Approvals

Approvals	IECEx ATEX UKCA

Dimensions and weights

Depth	40 mm	Depth (inches)	1.5748 inch
Height	44.5 mm	Height (inches)	1.752 inch
Width	6.1 mm	Width (inches)	0.2402 inch
Net weight	6.33 g		

Temperatures

Storage temperature	-25 °C...55 °C	Ambient temperature	-5 °C...40 °C
Continuous operating temp., min.	-50 °C	Continuous operating temp., max.	100 °C

Environmental Product Compliance

RoHS Compliance Status	Compliant
REACH SVHC	No SVHC above 0.1 wt%

Material data

Basic material	PA 66	Colour	Dark Blue
UL 94 flammability rating	V-2		

Rating data IECEx/ATEX

Certificate No. (ATEX)	TUEV18ATEX8207U	Certificate No. (IECEX)	IECEXTUR18.0017U
Max. voltage (ATEX)	690 V	Current (ATEX)	24 A
Wire cross section max. (ATEX)	6 mm²	Max. voltage (IECEX)	690 V
Current (IECEX)	24 A	Wire cross section max. (IECEX)	6 mm²

System specifications

End cover plate required	Yes	Number of potentials	1
Number of levels	1	Number of clamping points per level	2
Levels cross-connected internally	No	N-function	No
PE function	No	PEN function	No

Additional technical data

Explosion-tested version	Yes	Type of mounting	Snap-on

Conductors for clamping (rated connection)

Wire connection cross section AWG, max.	AWG 14	Connection direction	on side
Number of connections	2	Clamping range, max.	2.5 mm²
Clamping range, min.	0.13 mm²	Wire connection cross section AWG, min.	AWG 26
Wire connection cross-section, finely stranded with wire-end ferrules DIN 46228/4, max.	4 mm²	Wire connection cross-section, finely stranded with wire-end ferrules DIN 46228/4, min.	0.5 mm²

SAK 2.5/35 DBL

Weidmüller Interface GmbH & Co. KG
Klingenbergstraße 26
D-32758 Detmold
Germany

www.weidmueller.com

Technical data

Wire connection cross-section, finely stranded with wire-end ferrules DIN 46228/1, max.	4 mm²	Wire connection cross-section, finely stranded with wire-end ferrules DIN 46228/1, min.	0.5 mm²
Wire connection cross section, finely stranded, max.	4 mm²	Wire connection cross section, finely stranded, min.	0.5 mm²
Connection cross-section, stranded, max.	4 mm²	Connection cross-section, stranded, min.	0.5 mm²
Wire connection cross-section, solid core, max.	6 mm²	Wire connection cross-section, solid core, min.	0.5 mm²

General

Wire connection cross section AWG, max.	AWG 14	Wire connection cross section AWG, min.	AWG 26

Rating data

Rated cross-section	2.5 mm²	Nominal current	24 A
Volume resistance according to IEC 60947-7-x	1.33 mΩ	Power loss in accordance with IEC 60947-7-x	0.77 W
Pollution severity	3		

Classifications

ETIM 8.0	EC000897	ETIM 9.0	EC000897
ETIM 10.0	EC000897	ECLASS 14.0	27-25-01-01
ECLASS 15.0	27-25-01-01		