Data sheet

BLZP 5.08HC/02/90 SN OR BX PRT

Weidmüller Interface GmbH & Co. KG
Klingenbergstraße 26
D-32758 Detmold
Germany

www.weidmueller.com

Product image

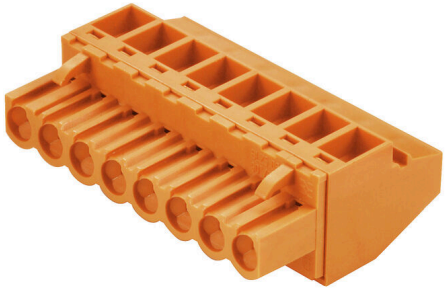

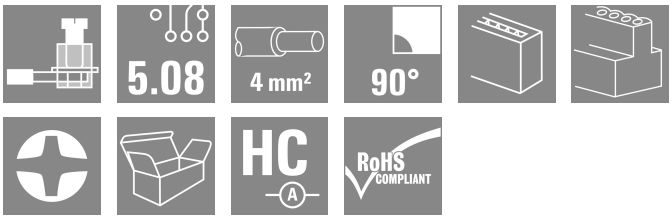

Similar to illustration

Female plugs with clamping-yoke connection for connecting wires with a right-angle (90° or 270°) outlet direction. The female connectors provide space for labelling and can be coded. Fastened by means of a flange or release latch. They also provide an integrated plus/minus screw, protection against faulty insertion of the wire, and they are delivered with open clamping yokes. HC = High Current.

General ordering data

Version	PCB plug-in connector, female plug, 5.08 mm, Number of poles: 2, 90°, Clamping yoke connection, Clamping range, max. : 4 mm², Box
Order No.	2533890000
Type	BLZP 5.08HC/02/90 SN OR BX PRT
GTIN (EAN)	4050118545449
Qty.	180 items
Product data	IEC: 400 V / 23 A / 0.2 - 4 mm² UL: 300 V / 20 A / AWG 26 - AWG 12
Packaging	Box

BLZP 5.08HC/02/90 SN OR BX PRT

Weidmüller Interface GmbH & Co. KG
Klingenbergstraße 26
D-32758 Detmold
Germany

www.weidmueller.com

Technical data

Approvals

Approvals	
ROHS	Conform
UL File Number Search	UL Website
Certificate No. (cURus)	E60693

Dimensions and weights

Depth	27.2 mm	Depth (inches)	1.0709 inch
Height	14.1 mm	Height (inches)	0.5551 inch
Width	10.16 mm	Width (inches)	0.4 inch
Net weight	3.71 g		

Environmental Product Compliance

RoHS Compliance Status	Compliant without exemption	
REACH SVHC	No SVHC above 0.1 wt%	
Product Carbon Footprint	Cradle to gate	0,147 kg CO2 eq.

System Parameters

Product family	OMNIMATE Signal - series BL/SL 5.08			
Type of connection	Field connection			
Wire connection method	Clamping yoke connection			
Pitch in mm (P)	5.08 mm			
Pitch in inches (P)	0.200 "			
Conductor outlet direction	90°			
Number of poles	2			
L1 in mm	5.08 mm			
L1 in inches	0.200 "			
Number of rows	1			
Pin series quantity	1			
Rated cross-section	4 mm²			
Touch-safe protection acc. to DIN VDE 57 106	Safe from finger touch			
Touch-safe protection acc. to DIN VDE 0470	IP20 plugged/ IP10 unplugged			
Protection degree	IP20			
Volume resistance	≤5 mΩ			
Can be coded	Yes			
Stripping length	7 mm			
Clamping screw	M 2.5			
Screwdriver blade	0.6 x 3.5, PH 1, PZ 1			
Screwdriver blade standard	DIN 5264, ISO 8764/2-PH, ISO 8764/2-PZ			
Plugging cycles	25			
Plugging force/pole, max.	10 N			
Pulling force/pole, max.	9 N			
Tightening torque	Torque type	Wire connection		
	Usage information	Tightening torque	min.	0.4 Nm
			max.	0.5 Nm

BLZP 5.08HC/02/90 SN OR BX PRT

Weidmüller Interface GmbH & Co. KG
Klingenbergstraße 26
D-32758 Detmold
Germany

www.weidmueller.com

Technical data

Material data

Insulating material	PBT	Colour	orange
Colour chart (similar)	RAL 2000	Insulating material group	IIIa
Comparative Tracking Index (CTI)	≥ 200	Moisture Level (MSL)	
UL 94 flammability rating	V-0	Contact material	Cu-alloy
Contact surface	tinned	Layer structure of plug contact	4...8 µm Sn hot-dip tinned
Storage temperature, min.	-40 °C	Storage temperature, max.	70 °C
Operating temperature, min.	-50 °C	Operating temperature, max.	100 °C
Temperature range, installation, min.	-25 °C	Temperature range, installation, max.	100 °C

Conductors suitable for connection

Clamping range, min.	0.13 mm²			
Clamping range, max.	4 mm²			
Wire connection cross section AWG, min.	AWG 30			
Wire connection cross section AWG, max.	AWG 12			
Solid, min. H05(07) V-U	0.2 mm²			
Solid, max. H05(07) V-U	4 mm²			
Flexible, min. H05(07) V-K	0.2 mm²			
Flexible, max. H05(07) V-K	4 mm²			
w. plastic collar ferrule, DIN 46228 pt 4, min.	0.2 mm²			
w. plastic collar ferrule, DIN 46228 pt 4, max.	2.5 mm²			
w. wire end ferrule, DIN 46228 pt 1, min.	0.2 mm²			
w. wire end ferrule, DIN 46228 pt 1, max.	4 mm²			
Plug gauge in accordance with EN 60999 a x b; ø	2.8 mm x 2.4 mm			
Clampable conductor	Cross-section for conductor connection	nominal	0.5 mm²	
	wire end ferrule	Stripping length	nominal	6 mm
		Recommended wire-end ferrule	H0,5/6	
		Stripping length	nominal	8 mm
		Recommended wire-end ferrule	H0,5/12 OR	
	Cross-section for conductor connection	nominal	1 mm²	
	wire end ferrule	Stripping length	nominal	6 mm
		Recommended wire-end ferrule	H1,0/6	
	Cross-section for conductor connection	nominal	1.5 mm²	
	wire end ferrule	Stripping length	nominal	7 mm
		Recommended wire-end ferrule	H1,5/7	
	Cross-section for conductor connection	nominal	2.5 mm²	
	wire end ferrule	Stripping length	nominal	7 mm
		Recommended wire-end ferrule	H2,5/7	
		Stripping length	nominal	10 mm
		Recommended wire-end ferrule	H2,5/15D BL	
Reference text	The outside diameter of the plastic collar should not be larger than the pitch (P), Length of ferrules is to be chosen depending on the product and the rated voltage.			

BLZP 5.08HC/02/90 SN OR BX PRT

Weidmüller Interface GmbH & Co. KG
Klingenbergstraße 26
D-32758 Detmold
Germany

www.weidmueller.com

Technical data

Rated data acc. to IEC

tested acc. to standard	IEC 60664-1, IEC 61984	Rated current, min. number of poles (Tu=20°C)	23 A
Rated current, max. number of poles (Tu=20°C)	18 A	Rated current, min. number of poles (Tu=40°C)	21 A
Rated current, max. number of poles (Tu=40°C)	16 A	Rated voltage for surge voltage class / pollution degree II/2	400 V
Rated voltage for surge voltage class / pollution degree III/2	320 V	Rated voltage for surge voltage class / pollution degree III/3	250 V
Rated impulse voltage for surge voltage class/ pollution degree II/2	4 kV	Rated impulse voltage for surge voltage class/ pollution degree III/2	4 kV
Rated impulse voltage for surge voltage class/ contamination degree III/3	4 kV	Short-time withstand current resistance	3 x 1s with 120 A

Rated data acc. to CSA

Rated voltage (Use group B / CSA)	300 V	Rated voltage (Use group C / CSA)	50 V
Rated voltage (Use group D / CSA)	300 V	Rated current (Use group B / CSA)	20 A
Rated current (Use group D / CSA)	20 A	Wire cross-section, AWG, min.	AWG 30
Wire cross-section, AWG, max.	AWG 12		

Rated data acc. to UL 1059

Institute (cURus)	CURUS	Certificate No. (cURus)	E60693
Rated voltage (Use group B / UL 1059)	300 V	Rated voltage (Use group D / UL 1059)	300 V
Rated current (Use group B / UL 1059)	20 A	Rated current (Use group D / UL 1059)	10 A
Wire cross-section, AWG, min.	AWG 26	Wire cross-section, AWG, max.	AWG 12
Reference to approval values	Specifications are maximum values, details - see approval certificate.		

Packing

Packaging	Box	VPE length	349.00 mm
VPE width	139.00 mm	VPE height	31.00 mm

Type tests

Test: Durability of markings	Standard	DIN EN 61984 section 7.3.2 / 09.02 taking pattern from DIN EN 60068-2-70 / 07.96	
	Test	mark of origin, rated voltage, rated cross-section, type of material	
	Evaluation	available	
	Test	durability	
	Evaluation	passed	
Test: Misengagement (Non-interchangeability)	Standard	DIN EN 60512-13-5 / 11.06, IEC 60512-13-5 / 02.06	
	Test	180° turned with coding elements	
	Evaluation	passed	
	Test	visual examination	
	Evaluation	passed	
Test: Clampable cross section	Standard	DIN EN 60999-1 section 7 and 9.1 / 12.00, DIN EN 60947-1 section 8.2.4.5.1 / 12.02	
	Conductor type	Type of conductor and conductor cross-section	solid 0.2 mm²
		Type of conductor and conductor cross-section	stranded 0.2 mm²

BLZP 5.08HC/02/90 SN OR BX PRT

Weidmüller Interface GmbH & Co. KG
Klingenbergstraße 26
D-32758 Detmold
Germany

www.weidmueller.com

Technical data

		Type of conductor and conductor cross-section	solid 2.5 mm²
		Type of conductor and conductor cross-section	stranded 2.5 mm²
		Type of conductor and conductor cross-section	AWG 26/1
		Type of conductor and conductor cross-section	AWG 26/19
	Evaluation	passed	
Test for damage to and accidental loosening of conductors	Standard	DIN EN 60999-1 section 9.4 / 12.00	
	Requirement	0.2 kg	
	Conductor type	Type of conductor and conductor cross-section	AWG 26/1
		Type of conductor and conductor cross-section	AWG 26/19
	Evaluation	passed	
	Requirement	0.3 kg	
	Conductor type	Type of conductor and conductor cross-section	solid 0.5 mm²
		Type of conductor and conductor cross-section	stranded 0.5 mm²
	Evaluation	passed	
	Requirement	0.9 kg	
	Conductor type	Type of conductor and conductor cross-section	AWG 12/1
		Type of conductor and conductor cross-section	AWG 12/19
	Evaluation	passed	
Pull-out test	Standard	DIN EN 60999-1 section 9.5 / 12.00	
	Requirement	≥10 N	
	Conductor type	Type of conductor and conductor cross-section	AWG 26/1
		Type of conductor and conductor cross-section	AWG 26/19
	Evaluation	passed	
	Requirement	≥20 N	
	Conductor type	Type of conductor and conductor cross-section	H05V-U0.5
		Type of conductor and conductor cross-section	H05V-K0.5
	Evaluation	passed	
	Requirement	≥60 N	
	Conductor type	Type of conductor and conductor cross-section	H07V-U4.0
		Type of conductor and conductor cross-section	H07V-K4.0

BLZP 5.08HC/02/90 SN OR BX PRT

Weidmüller Interface GmbH & Co. KG
Klingenbergstraße 26
D-32758 Detmold
Germany

www.weidmueller.com

Technical data

		Type of conductor and conductor cross-section	AWG 12/1
		Type of conductor and conductor cross-section	AWG 12/19
	Evaluation	passed	

Important note

IPC conformity	Conformity: The products are developed, manufactured and delivered according international recognized standards and norms and comply with the assured properties in the data sheet resp. fulfill decorative properties in accordance with IPC-A-610 "Class 2". Further claims on the products can be evaluated on request.
Notes	• Additional variants on request • Gold-plated contact surfaces on request • Rated current related to rated cross-section & min. No. of poles. • Wire end ferrule without plastic collar to DIN 46228/1 • Wire end ferrule with plastic collar to DIN 46228/4 • P on drawing = pitch • Rated data refer only to the component itself. Clearance and creepage distances to other components are to be designed in accordance with the relevant application standards. • In accordance with IEC 61984, OMNIMATE-connectors are connectors without breaking capacity (COC). During designated use, connectors are not allowed to be engaged or disengaged when live or under load • Long term storage of the product with average temperature of 50 °C and maximum humidity 70%, 36 months

Classifications

ETIM 8.0	EC002638	ETIM 9.0	EC002638
ETIM 10.0	EC002638	ECLASS 14.0	27-46-02-02
ECLASS 15.0	27-46-02-02		

BLZP 5.08HC/02/90 SN OR BX PRT

Weidmüller Interface GmbH & Co. KG
Klingenbergstraße 26
D-32758 Detmold
Germany

www.weidmueller.com

Drawings

Dimensional drawing

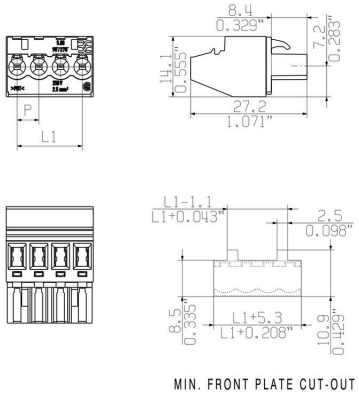

BLZP 5.08HC/02/90 SN OR BX PRT

Weidmüller Interface GmbH & Co. KG
Klingenbergstraße 26
D-32758 Detmold
Germany

www.weidmueller.com

Accessories

Coding elements



Only connects what is supposed to be connected: the right connection at the right place.
Coding elements and locking devices clearly assign connecting elements during the manufacturing process and operation
The coding elements and locking devices are inserted prior to assembly or during the cable assembly phase.
The Weidmüller alternative: configure online using the variant configurator to precode prior to delivery.
Incorrect assembly on the circuit board and incorrect plugging of connecting elements is no longer possible.
The advantage: no troubleshooting during manufacture and no operational errors by the user.

General ordering data

Type	BLZ/SL KO OR BX	Version
Order No.	1573010000	PCB plug-in connector, Accessories, Coding element, orange, Number
GTIN (EAN)	4008190048396	of poles: 1
Qty.	100 ST	
Type	BLZ/SL KO BK BX	Version
Order No.	1545710000	PCB plug-in connector, Accessories, Coding element, black, Number
GTIN (EAN)	4008190087142	of poles: 1
Qty.	50 ST	

Slotted screwdriver



Slotted screwdriver with rounded blade SD DIN 5265, ISO 2380/2, output to DIN 5264, ISO 2380/1.
ChromTop tip, SoftFinish grip

General ordering data

Type	SDS 0.6X3.5X100	Version
Order No.	2749340000	Screwdriver, Blade width (B): 3.5 mm, Blade length: 100 mm, Blade
GTIN (EAN)	4050118895568	thickness (A): 0.6 mm
Qty.	1 ST	
Type	SDIS 0.6X3.5X100	Version
Order No.	2749810000	Screwdriver, Blade width (B): 3.5 mm, Blade length: 100 mm, Blade
GTIN (EAN)	4050118897012	thickness (A): 0.6 mm
Qty.	1 ST	

BLZP 5.08HC/02/90 SN OR BX PRT

Weidmüller Interface GmbH & Co. KG
Klingenbergstraße 26
D-32758 Detmold
Germany

www.weidmueller.com

Accessories

Crosshead screwdriver Phillips



Crosshead screwdriver, Phillips, SDK PH DIN 5262, ISO 8764/2-PH, output to ISO 8764-PH, ChromTop tip, SoftFinish grip

General ordering data

Type	SDK PH1 X 80	Version
Order No.	2749410000	Screwdriver, Blade width (B): 4.5 mm, 80 mm, Blade thickness (A): 1
GTIN (EAN)	4050118895636	
Qty.	1 ST	

Crosshead screwdriver Pozidriv



Crosshead screwdriver, Pozidriv, SDK PZ DIN 5262, ISO 8764/2-PZ, output to ISO 8764/1-PZ, ChromTop tip, SoftFinish grip

General ordering data

Type	SDK PZ1 X 80	Version
Order No.	2749440000	Screwdriver, Blade width (B): 14.5 mm, 80 mm, Blade thickness (A): 1
GTIN (EAN)	4050118895667	
Qty.	1 ST	