Data sheet

SAI-08L-VP12-3A-M08L-AND

Weidmüller Interface GmbH & Co. KG
Klingenbergstraße 26
D-32758 Detmold
Germany

www.weidmueller.com

SAI – logic module These devices allow the combination of signals by means of an AND or an OR gate. This function leads to a reduction in the amount of wiring. The required inputs to the PLC can be reduced by up to 6 inputs. This process therefore saves the amount of wiring and material in the field.

General ordering data

Version	with M12 outlet, M8, 30 V, , LED: Yes, LED initiator: Yes, Wiring type: AND
Order No.	2512820000
Type	SAI-08L-VP12-3A-M08L-AND
GTIN (EAN)	4050118527919
Qty.	1 items

SAI-08L-VP12-3A-M08L-AND

Weidmüller Interface GmbH & Co. KG
Klingenbergstraße 26
D-32758 Detmold
Germany

www.weidmueller.com

Technical data

Approvals

Approvals	
ROHS	Conform

Dimensions and weights

Net weight	107.2 g

Temperatures

Operating temperature	-20 - 90°C

Environmental Product Compliance

RoHS Compliance Status	Compliant without exemption
REACH SVHC	No SVHC above 0.1 wt%

Connection data

Distributor outlet	with M12 outlet	Tightening torque	M8: 0.5 - 0.6 Nm, M12: 0.8 - 1.2 Nm

Electrical data

Rated voltage, min.	15 V	Rated voltage, max.	30 V
Rated voltage	24 V	Nominal current	500 mA
Max. current-carrying capacity per slot	500 mA	Total current	2 A
Electrical isolation available	No		

General technical data

Protection degree	IP67	Logic function	and
Number of poles	3	Number of contact sockets	8
Connection thread	M8	Pollution severity	3
Fire behaviour	V-0	LED	Yes
LED initiator	Yes	LED colour for indicating operation	green
LED colour for I/O function	red, green		

Material data

Housing main material	PBT	Housing colour	black (similar to RAL 9005)
Screw socket	Nickel-plated CuZn	Contact material	Nickel-plated CuZn
Contact surface	Gold-plated	Contact carrier material	PBT (UL 94 V0)

Technical data cable

Number of poles	3

Classifications

ETIM 8.0	EC003558	ETIM 9.0	EC003558
ETIM 10.0	EC003558	ECLASS 14.0	27-44-01-11

SAI-08L-VP12-3A-M08L-AND

Weidmüller Interface GmbH & Co. KG
Klingenbergstraße 26
D-32758 Detmold
Germany

www.weidmueller.com

Technical data

ECLASS 15.0	27-44-01-11		

SAI-08L-VP12-3A-M08L-AND

Weidmüller Interface GmbH & Co. KG
Klingenbergstraße 26
D-32758 Detmold
Germany

www.weidmueller.com

Drawings

Detailed drawing

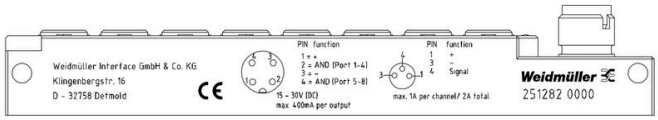

Dimensioned drawing

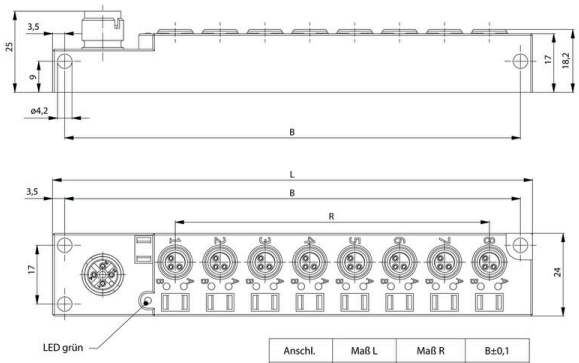

Anschl.	Maß L	Maß R	B±0,1
8fach	139	7x13=91	132
4fach	87	3x13=39	80

Wiring diagram

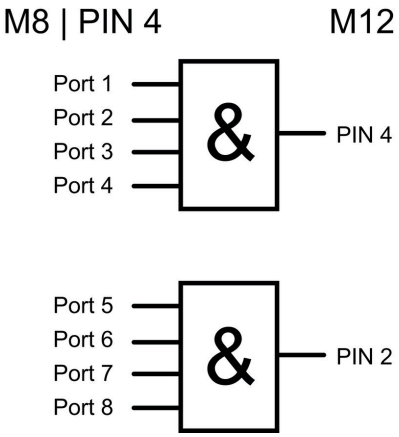

Pole scheme

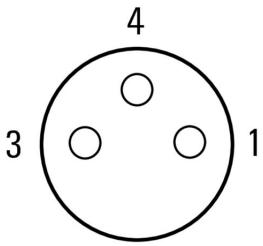

SAI-08L-VP12-3A-M08L-AND

Weidmüller Interface GmbH & Co. KG
Klingenbergstraße 26
D-32758 Detmold
Germany

www.weidmueller.com

Accessories

Accessories

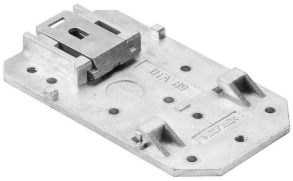

Passive M12 distributors are available in all conceivable forms and configurations. Furthermore, a number of special versions, e.g. SAI distributors for EX zones or the ergonomic M8, are available only from Weidmüller. These innovative products are backed up by numerous proprietary rights.

General ordering data

Type	SAIEND 1/4 M8G 3P	Version
Order No.	2662450000	M8, LED: , LED initiator: , Wiring type:
GTIN (EAN)	4050118677379	
Qty.	1 ST	

Blank

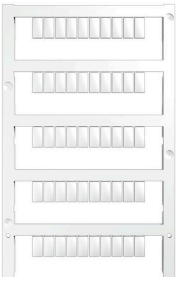

MultiFit is the Weidmüller marker system used for other makes of terminals. Similar to the Weidmüller Dekafix, the markers of the MultiFit family are available ready-for-use with standard printing.
We recommend to carry out a test with sample markers on the terminals used when using MultiFit for the first time.

- One marker, suitable for different makes of terminals.
- Ready-to-use markers with standard printing
- Blank markers for printing with the PrintJet CONNECT or Plotter
- Delivery of individually printed markers according to customer CAE data or specifications
- One marking system for all applications

For custom printing: Please send us a file of our labeling software M-Print PRO or M-Print PRO Online (without installation) for your labeling specifications.

General ordering data

Type	MFF 10/6 MC NE WS	Version
Order No.	1856780000	MultiFit, Terminal marker, 10 x 6 mm, Pitch in mm (P): 6.00 Festo,
GTIN (EAN)	4032248400881	white
Qty.	600 ST	