Data sheet

WPD 230 2X50/2X50 BN

Weidmüller Interface GmbH & Co. KG
Klingenbergstraße 26
D-32758 Detmold
Germany

www.weidmueller.com

Product image

Klippon® Connect power feed-in terminal blocks WPD allow for an easy and safe installation of aluminium and copper conductors on a small footprint. A power supply or monitoring connection can also be used as an option. Customers can use the power feed-in terminal blocks WPD, regardless of the conductor material. They can be mounted either directly or on DIN rail TS35.

General ordering data

Version	Potential distributor terminal, Screw connection, brown, 50 mm², 150 A, 1000 V, Number of connections: 4, Number of levels: 1
Order No.	2502610000
Type	WPD 230 2X50/2X50 BN
GTIN (EAN)	4050118516432
Qty.	5 items

WPD 230 2X50/2X50 BN

Weidmüller Interface GmbH & Co. KG
Klingenbergstraße 26
D-32758 Detmold
Germany

www.weidmueller.com

Technical data

Approvals

Approvals	
ROHS	Conform
UL File Number Search	UL Website
Certificate No. (cURus)	E60693

Dimensions and weights

Depth	45 mm	Depth (inches)	1.7716 inch
Height	70 mm	Height (inches)	2.7559 inch
Width	35.6 mm	Width (inches)	1.4016 inch
Net weight	66 g		

Temperatures

Storage temperature	-25 °C...55 °C	Ambient temperature	-50 °C...75 °C
Continuous operating temp., min.	-50 °C	Continuous operating temp., max.	120 °C

Environmental Product Compliance

RoHS Compliance Status	Compliant without exemption
REACH SVHC	No SVHC above 0.1 wt%

Material data

Basic material	Wemid	Colour	brown
UL 94 flammability rating	V-0		

Rating data IECEx/ATEX

Certificate No. (ATEX)	CNEX18ATEX0016U	Certificate No. (IECEX)	IECEXNEX18.0010U
Max. voltage (ATEX)	880 V	Current (ATEX)	150 A
Wire cross section max. (ATEX)	50 mm²	Max. voltage (IECEX)	880 V
Current (IECEX)	150 A		

System specifications

Version	Screw connection	End cover plate required	No
Number of potentials	1	Number of levels	1
Number of clamping points per level	4	Levels cross-connected internally	No
PE connection	No	Mounting rail	TS 35
PE function	No		

Additional technical data

Installation advice	Terminal rail / mounting plate	Explosion-tested version	Yes
Type of mounting	Snap-on		

WPD 230 2X50/2X50 BN

Weidmüller Interface GmbH & Co. KG
Klingenbergstraße 26
D-32758 Detmold
Germany

www.weidmueller.com

Technical data

Conductors for clamping (additional connection)

Connection type, additional connection	Screw connection

Conductors for clamping (rated connection)

Wire connection cross section AWG, max.	AWG 1/0	Connection direction	on side
Type of connection 2	Screw connection	Type of connection	Screw connection
Number of connections	4	Clamping range, max.	50 mm²
Clamping range, min.	4 mm²	Wire connection cross section AWG, min.	AWG 10
Wire connection cross-section, finely stranded with wire-end ferrules DIN 46228/4, min.	4 mm²	Wire connection cross-section, finely stranded with wire-end ferrules DIN 46228/1, max.	35 mm²
Wire connection cross-section, finely stranded with wire-end ferrules DIN 46228/1, min.	4 mm²	Wire connection cross section, finely stranded, max.	50 mm²
Wire connection cross section, finely stranded, min.	4 mm²	Connection cross-section, stranded, max.	50 mm²
Connection cross-section, stranded, min.	4 mm²	Wire connection cross-section, solid core, max.	50 mm²
Wire connection cross-section, solid core, min.	4 mm²		

General

Number of poles	1	Wire connection cross section AWG, max.	AWG 1/0
Installation advice	Terminal rail / mounting plate	Wire connection cross section AWG, min.	AWG 10
Standards	IEC 60947-7-1, UL 1059, CSA	Mounting rail	TS 35

Rating data

Rated cross-section	50 mm²	Rated voltage	1000 V
Rated AC voltage	1000 V	Rated DC voltage	1000 V
Nominal current	150 A	Current at maximum wires	150 A
Standards	IEC 60947-7-1, UL 1059, CSA	Volume resistance according to IEC 60947-7-x	0.21 mΩ
Rated impulse withstand voltage	8 kV	Power loss in accordance with IEC 60947-7-x	4.80 W
Surge voltage category	III	Pollution severity	3

UL rating data

Certificate No. (cURus)	E60693

Important note

Product information	You will find additional information in the downloadsection of the onlinecatalogue

Classifications

ETIM 8.0	EC000897	ETIM 9.0	EC000897
ETIM 10.0	EC000897	ECLASS 14.0	27-25-01-19
ECLASS 15.0	27-25-01-19		

WPD 230 2X50/2X50 BN

Weidmüller Interface GmbH & Co. KG
Klingenbergstraße 26
D-32758 Detmold
Germany

www.weidmueller.com

Drawings

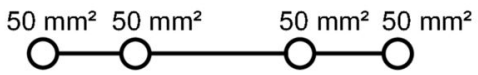

Conductor connection data according to IEC 60947-7-1 (Cu)

Input (x1) / Output (x1)	Copper		Aluminum	
50 mm²	10 Nm		14 Nm	14 Nm
35 mm²		10 Nm		
25 mm²	8 Nm	8 Nm	12 Nm	10 Nm
16 mm²			10 Nm	
10 mm²	6 Nm	6 Nm		
6 mm²				
4 mm²				
2,5 mm²				
max. current with 2 x 50 mm² (acc. to IEC)	300 A		270 A	
Stripping lengths	16 mm			
Allen screw	M10 (SW 5 mm)			

Stranded | Solid | Flexible with ferrule | Sector shaped

Conductor connection data according to UL 1059 (Al+Cu)

Input (x1) / Output (x1)	Copper		Aluminum	
AWG 1/0	123.9Lb In.		123.9Lb In.	123.9Lb In.
AWG 2				
AWG 4		123.9Lb In.		
AWG 6				
AWG 8				
AWG 10				
AWG 12				
max. current at 1 x 50 mm² (acc. to UL)	150 A		120 A	
Stripping lengths	16 mm			
Allen screw	M10 (SW 5 mm)			

Stranded | Solid | Flexible with ferrule | Sector shaped

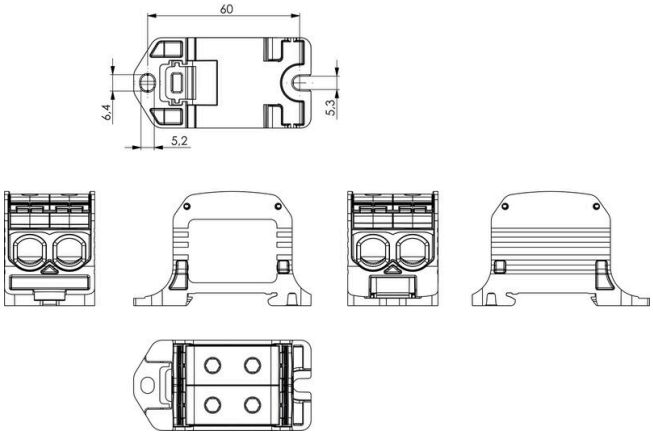

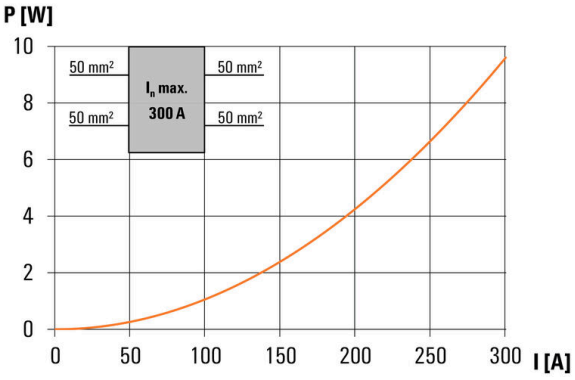

Weidmüller Interface GmbH & Co. KG
Klingenbergstraße 26
D-32758 Detmold
Germany

www.weidmueller.com

Accessories

Cover

Our systems for touch protection ensure greater safety in your cabinet. They provide protection against electric shock caused by accidental contact with live parts due to operation or faults.

General ordering data

Type	WPDPC X30 GY	Version
Order No.	2503330000	Cover hood (terminal), Wemid
GTIN (EAN)	4050118533323	
Qty.	54 ST	

Blank

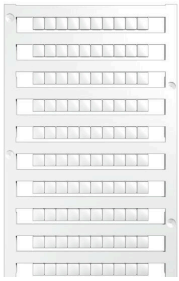

The Dekafix (DEK) marker is the universal marker for all conductor and plug-in connectors as well as for electronic sub-assemblies. The system is ideal for short number sequences and covers a wide range of ready-printed markers.
Strips for fast installation in only one work step. The printing is easy to read, rich in contrast and available in various widths.

- Large range of ready-to-use markers
- Strips for fast installation
- Terminal markers, suitable for all Weidmüller cable connectors
- Available as blank MultiCard or with standard printing

For custom printing: Please send us a file of our labeling software M-Print PRO or M-Print PRO Online (without installation) for your labeling specifications.

General ordering data

Type	DEK 5/5 MC NE WS	Version
Order No.	1609801044	Dekafix, Terminal marker, 5 x 5 mm, Pitch in mm (P): 5.00
GTIN (EAN)	4008190397111	Weidmueller, white
Qty.	1000 ST	

Socket wrench sets

Allen key made from fully hardened, high-alloy chromium-vanadium- steel, acc. to DIN ISO 2936 L (DIN 911), high-quality refined surface.

WPD 230 2X50/2X50 BN

Weidmüller Interface GmbH & Co. KG
Klingenbergstraße 26
D-32758 Detmold
Germany

www.weidmueller.com

Accessories

General ordering data

Type	SK WSD-S 1,5-10,0	Version
Order No.	9008850000	Mounting tool
GTIN (EAN)	4032248266609	
Qty.	1 ST	
Type	SKS 2,0-8,0 MR	Version
Order No.	9008870000	socket wrenches
GTIN (EAN)	4032248266623	
Qty.	1 ST	

Marker holder

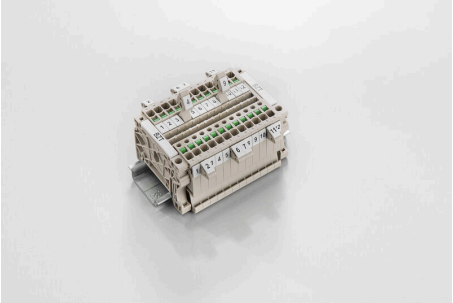

The marker holder offer the possibility of additional mounting of standard markers with a pitch of 5 or 5.1 mm. The angled holders can be optionally snaped together and could be mounted in all standard marking channels of the Klippon® Connect modular terminal blocks. Fitting marker types could be found under the respective accessories of the designation marking holder.

General ordering data

Type	BZT 1 WS 10/5	Version
Order No.	1805490000	Accessories, Marker holder
GTIN (EAN)	4032248270231	
Qty.	100 ST	
Type	BZT 1 ZA WS 10/5	Version
Order No.	1805520000	Accessories, Marker holder
GTIN (EAN)	4032248270248	
Qty.	100 ST	