Data sheet

SV-SMT 7.62HP/02/270SF 2.6SN BK BX

Weidmüller Interface GmbH & Co. KG
Klingenbergstraße 26
D-32758 Detmold
Germany

www.weidmueller.com

Product image

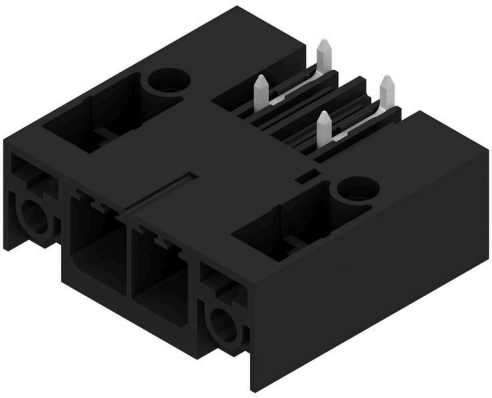

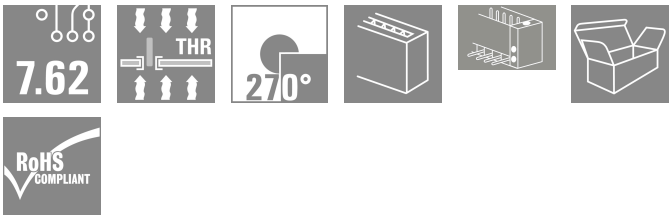

OMNIMATE Power BV / SV 7.62HP – the 28 kVA performance class
Tailor-made solutions for high performers
More power reserves for higher load bearing capacity: The OMNIMATE Power BV / SV 7.62HP is the middle-class of the power connector systems. It has a large clamping capacity, high overload resistance and the largest range of variants and accessories to choose from: the high performer of the HP range. HP means High Performance – this performance covers a great deal: the full rated current up to 50°C without derating, unlimited 600-V approval according to UL, and the additional finger safety for 400 V-TN systems (+ 3.0 mm) in compliance with the application directive IEC 61800-5-1.

General ordering data

Version	PCB plug-in connector, male header, Screw flange, THT/THR solder connection, 7.62 mm, Number of poles: 2, 270°, Solder pin length (l): 2.6 mm, tinned, black, Box
Order No.	2499940000
Type	SV-SMT 7.62HP/02/270SF 2.6SN BK BX
GTIN (EAN)	4050118513363
Qty.	60 items
Product data	IEC: 1000 V / 41 A UL: 300 V / 40.5 A
Packaging	Box

SV-SMT 7.62HP/02/270SF 2.6SN BK BX

Weidmüller Interface GmbH & Co. KG
Klingenbergstraße 26
D-32758 Detmold
Germany

www.weidmueller.com

Technical data

Approvals

Approvals	cULus
ROHS	Conform
UL File Number Search	UL Website
Certificate No. (cURus)	E60693

Dimensions and weights

Depth	28.3 mm	Depth (inches)	1.1142 inch
Height	14 mm	Height (inches)	0.5512 inch
Height of lowest version	11.4 mm	Width	30.48 mm
Width (inches)	1.2 inch	Net weight	4.4 g

Environmental Product Compliance

RoHS Compliance Status	Compliant without exemption
REACH SVHC	No SVHC above 0.1 wt%

System specifications

Product family	OMNIMATE Power - series BV/SV 7.62HP	Type of connection	Board connection
Mounting onto the PCB	THT/THR solder connection	Pitch in mm (P)	7.62 mm
Pitch in inches (P)	0.300 "	Outgoing elbow	270°
Number of poles	2	Number of solder pins per pole	2
Solder pin length (l)	2.6 mm	Solder pin length tolerance	+0.1 / -0.3 mm
Solder pin dimensions	0.8 x 1.0 mm	Solder eyelet hole diameter (D)	1.5 mm
Solder eyelet hole diameter tolerance (D)	+ 0,1 mm	L1 in mm	7.62 mm
L1 in inches	0.300 "	Number of rows	1
Pin series quantity	1	Touch-safe protection acc. to DIN VDE 57 106	safe to back of hand above the printed circuit board
Touch-safe protection acc. to DIN VDE 0470	IP20 plugged/ IP10 unplugged	Protection degree	IP20, when fully mounted
Volume resistance	2.00 mΩ	Can be coded	Yes
Tightening torque for screw flange, min.	0.2 Nm	Tightening torque for screw flange, max.	0.3 Nm
Plugging cycles	25	Plugging force/pole, max.	12 N
Pulling force/pole, max.	7 N		

Material data

Insulating material	PA 9T	Colour	black
Colour chart (similar)	RAL 9011	Insulating material group	I
Comparative Tracking Index (CTI)	≥ 600	Insulation resistance	≥ 10^8 Ω
Moisture Level (MSL)	1	UL 94 flammability rating	V-0
Contact material	Cu-alloy	Contact surface	tinned
Layer structure of solder connection	1...3 µm Ni / 4...6 µm Sn matt	Layer structure of plug contact	1...3 µm Ni / 4...6 µm Sn matt
Storage temperature, min.	-40 °C	Storage temperature, max.	70 °C
Operating temperature, min.	-50 °C	Operating temperature, max.	130 °C
Temperature range, installation, min.	-25 °C	Temperature range, installation, max.	130 °C

SV-SMT 7.62HP/02/270SF 2.6SN BK BX

Weidmüller Interface GmbH & Co. KG
Klingenbergstraße 26
D-32758 Detmold
Germany

www.weidmueller.com

Technical data

Rated data acc. to IEC

tested acc. to standard	IEC 60664-1, IEC 61984	Rated current, min. number of poles (Tu=20°C)	41 A
Rated current, max. number of poles (Tu=20°C)	41 A	Rated current, min. number of poles (Tu=40°C)	41 A
Rated current, max. number of poles (Tu=40°C)	41 A	Rated voltage for surge voltage class / pollution degree II/2	1000 V
Rated voltage for surge voltage class / pollution degree III/2	630 V	Rated voltage for surge voltage class / pollution degree III/3	630 V
Rated impulse voltage for surge voltage class/ pollution degree II/2	6 kV	Rated impulse voltage for surge voltage class/ pollution degree III/2	6 kV
Rated impulse voltage for surge voltage class/ contamination degree III/3	6 kV	Short-time withstand current resistance	3 x 1s with 420 A
Creepage distance, min.	9.6 mm	Clearance, min.	6.9 mm

Rated data acc. to UL 1059

Institute (cURus)	CURUS	Certificate No. (cURus)	E60693
Rated voltage (Use group B / UL 1059)	300 V	Rated voltage (Use group C / UL 1059)	300 V
Rated voltage (Use group D / UL 1059)	300 V	Rated voltage (Use group F / UL 1059)	744 V
Rated current (Use group B / UL 1059)	40.5 A	Rated current (Use group C / UL 1059)	40.5 A
Rated current (Use group D / UL 1059)	10 A	Rated current (Use group F / UL 1059)	40.5 A
Creepage distance, min.	9.6 mm	Clearance distance, min.	6.9 mm
Reference to approval values	Specifications are maximum values, details - see approval certificate.		

Packing

Packaging	Box	VPE length	350.00 mm
VPE width	135.00 mm	VPE height	40.00 mm
Surface resistance	Rs = 109 - 1012 Ω		

Important note

IPC conformity	Conformity: The products are developed, manufactured and delivered according international recognized standards and norms and comply with the assured properties in the data sheet resp. fulfill decorative properties in accordance with IPC-A-610 "Class 2". Further claims on the products can be evaluated on request.
Notes	• Additional variants on request • Rated current related to rated cross-section & min. No. of poles. • P on drawing = pitch • Rated data refer only to the component itself. Clearance and creepage distances to other components are to be designed in accordance with the relevant application standards. • In accordance with IEC 61984, OMNIMATE-connectors are connectors without breaking capacity (COC). During designated use, connectors are not allowed to be engaged or disengaged when live or under load • Long term storage of the product with average temperature of 50 °C and maximum humidity 70%, 36 months

Classifications

ETIM 8.0	EC002637	ETIM 9.0	EC002637
ETIM 10.0	EC002637	ECLASS 14.0	27-46-02-01
ECLASS 15.0	27-46-02-01		

SV-SMT 7.62HP/02/270SF 2.6SN BK BX

Weidmüller Interface GmbH & Co. KG
Klingenbergstraße 26
D-32758 Detmold
Germany

www.weidmueller.com

Drawings

Product image

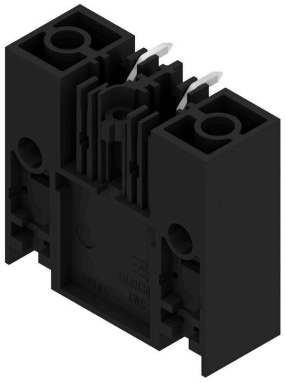

Dimensional drawing

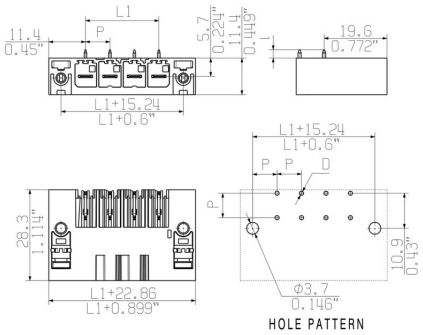

SV-SMT 7.62HP/02/270SF 2.6SN BK BX

Weidmüller Interface GmbH & Co. KG
Klingenbergstraße 26
D-32758 Detmold
Germany

www.weidmueller.com

Accessories

Coding elements

The pluggable connections for power electronics - optimised for modern drive technologies, e.g. motor starters, frequency converters and servo-controllers. OMNIMATE Power sets the new standard – with increased safety and innovative solutions such as the pluggable shield, integrated signal contacts and one-handed operation.
The three product lines offer you further advantages:

- Application-oriented scalability: from the compact 4 mm² connector for 29 A (IEC) or 20 A (UL) up to the sturdy 16 mm² connector for 76 A (IEC) or 54 A (UL)
- Unlimited usage up to 1,000 V (IEC) or 600 V (UL)
- A variety of application optimised mounting options

Our service:
Design your individual connectors simply by using the product configurator.

General ordering data

Type	BV/SV 7.62HP KO	Version
Order No.	1937590000	PCB plug-in connector, Accessories, Coding element, black, Number
GTIN (EAN)	4032248608881	of poles: 1
Qty.	50 ST	