Data sheet

LUP 10.16/05/90 5.0SN GY/GN BX SO

Weidmüller Interface GmbH & Co. KG
Klingenbergstraße 26
D-32758 Detmold
Germany

www.weidmueller.com

Product image

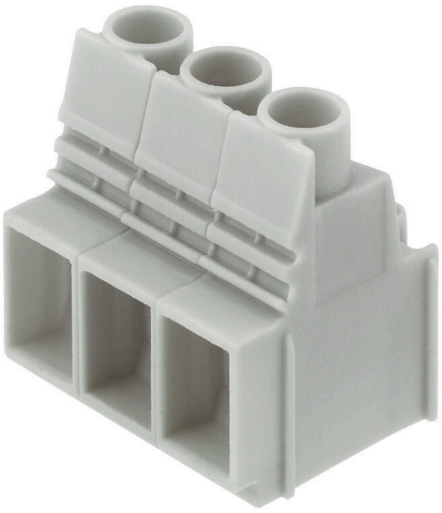

Similar to illustration

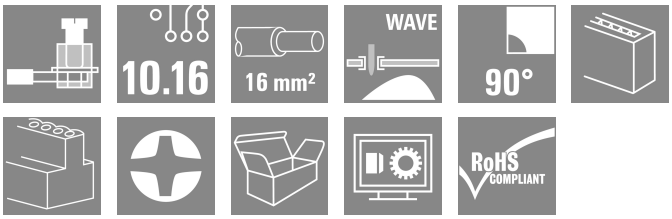

This PCB terminal provides connections for 1000 V, test point, 76 A and 16 mm² conductor cross-section with proven clamping yoke connection at 10.16 mm pitch, conductor outlet direction in 90° design.

General ordering data

Version	Printed circuit board terminals, 10.16 mm, Number of poles: 5, 90°, Solder pin length (l): 5 mm, tinned, Pebble grey, Clamping yoke connection, Clamping range, max. : 16 mm², Box
Order No.	2463310000
Type	LUP 10.16/05/90 5.0SN GY/GN BX SO
GTIN (EAN)	4050118477948
Qty.	20 items
Product data	IEC: 1000 V / 76 A / 0.5 - 16 mm² UL: 300 V / 58 A / AWG 26 - AWG 6
Packaging	Box

Data sheet

LUP 10.16/05/90 5.0SN GY/GN BX SO

Weidmüller Interface GmbH & Co. KG
Klingenbergstraße 26
D-32758 Detmold
Germany

www.weidmueller.com

Technical data

Approvals

ROHS	Conform

Dimensions and weights

Depth	25.1 mm	Depth (inches)	0.9882 inch
Height	36.5 mm	Height (inches)	1.437 inch
Height of lowest version	31.5 mm	Width	51.6 mm
Width (inches)	2.0315 inch	Net weight	46.6 g

Environmental Product Compliance

RoHS Compliance Status	Compliant without exemption
REACH SVHC	No SVHC above 0.1 wt%

System parameters

Product family	OMNIMATE Power - series LUP	Wire connection method	Clamping yoke connection
Mounting onto the PCB	THT solder connection	Conductor outlet direction	90°
Pitch in mm (P)	10.16 mm	Pitch in inches (P)	0.400 "
Number of poles	5	Pin series quantity	1
Fitted by customer	Yes	Max. adjacent poles per row	12
Solder pin length (l)	5 mm	Solder pin dimensions	1.2 x 1.2 mm
Solder eyelet hole diameter (D)	1.6 mm	Solder eyelet hole diameter tolerance (D)	+ 0,1 mm
Number of solder pins per pole	2	Screwdriver blade	1.0 x 5.5, PZ 2
Screwdriver blade standard	DIN 5264	Tightening torque, min.	1.2 Nm
Tightening torque, max.	1.5 Nm	Clamping screw	M 4
Stripping length	12 mm	L1 in mm	40.64 mm
L1 in inches	1.600 "	Touch-safe protection acc. to DIN VDE 0470	IP20 plugged/ IP10 unplugged
Touch-safe protection acc. to DIN VDE 57 106	Safe from finger touch	Protection degree	IP20
Volume resistance	0.50 mΩ		

Material data

Insulating material	Wemid (PA)	Colour	Pebble grey
Colour chart (similar)	RAL 7032	Insulating material group	I
Comparative Tracking Index (CTI)	≥ 600	Moisture Level (MSL)	
UL 94 flammability rating	V-0	Contact material	Cu-alloy
Contact surface	tinned	Layer structure of solder connection	1.5...3 µm Ni / 4...6 µm Sn matt
Storage temperature, min.	-40 °C	Storage temperature, max.	70 °C
Operating temperature, min.	-50 °C	Operating temperature, max.	120 °C
Temperature range, installation, min.	-25 °C	Temperature range, installation, max.	120 °C

Conductors suitable for connection

Clamping range, min.	0.13 mm²
Clamping range, max.	16 mm²
Wire connection cross section AWG, min.	AWG 22
Wire connection cross section AWG, max.	AWG 6
Solid, min. H05(07) V-U	0.5 mm²
Solid, max. H05(07) V-U	16 mm²

LUP 10.16/05/90 5.0SN GY/GN BX SO

Weidmüller Interface GmbH & Co. KG
Klingenbergstraße 26
D-32758 Detmold
Germany

www.weidmueller.com

Technical data

Stranded, min. H07V-R	6 mm²			
Stranded, max. H07V-R	16 mm²			
Flexible, min. H05(07) V-K	0.5 mm²			
Flexible, max. H05(07) V-K	16 mm²			
w. plastic collar ferrule, DIN 46228 pt 4, min.	2.5 mm²			
w. plastic collar ferrule, DIN 46228 pt 4, max.	10 mm²			
w. wire end ferrule, DIN 46228 pt 1, min.	2.5 mm²			
w. wire end ferrule, DIN 46228 pt 1, max.	10 mm²			
Plug gauge in accordance with EN 60999 a x b; ø	5.4 mm x 5.1 mm; 5.3 mm			
Clampable conductor	Cross-section for conductor connection	Type	fine-wired	
		nominal	2.5 mm²	
	wire end ferrule	Stripping length	nominal	12 mm
		Recommended wire-end ferrule	H2,5/12	
		Stripping length	nominal	14 mm
		Recommended wire-end ferrule	H2,5/19D BL	
	Cross-section for conductor connection	Type	fine-wired	
		nominal	4 mm²	
	wire end ferrule	Stripping length	nominal	12 mm
		Recommended wire-end ferrule	H4,0/12	
		Stripping length	nominal	14 mm
		Recommended wire-end ferrule	H4,0/20D GR	
	Cross-section for conductor connection	Type	fine-wired	
		nominal	6 mm²	
	wire end ferrule	Stripping length	nominal	12 mm
		Recommended wire-end ferrule	H6,0/12	
		Stripping length	nominal	14 mm
		Recommended wire-end ferrule	H6,0/20 SW	
	Cross-section for conductor connection	Type	fine-wired	
		nominal	10 mm²	
	wire end ferrule	Stripping length	nominal	15 mm
		Recommended wire-end ferrule	H10,0/22 EB	
		Stripping length	nominal	12 mm
		Recommended wire-end ferrule	H10,0/12	
Reference text	Length of ferrules is to be chosen depending on the product and the rated voltage., The outside diameter of the plastic collar should not be larger than the pitch (P)			

Rated data acc. to IEC

tested acc. to standard	IEC 60664-1, IEC 61984	Rated current, min. number of poles (Tu=20°C)	76 A
Rated current, max. number of poles (Tu=20°C)	72 A	Rated current, min. number of poles (Tu=40°C)	72 A
Rated current, max. number of poles (Tu=40°C)	62 A	Rated voltage for surge voltage class / pollution degree II/2	1000 V
Rated voltage for surge voltage class / pollution degree III/2	1000 V	Rated voltage for surge voltage class / pollution degree III/3	800 V

LUP 10.16/05/90 5.0SN GY/GN BX SO

Weidmüller Interface GmbH & Co. KG
Klingenbergstraße 26
D-32758 Detmold
Germany

www.weidmueller.com

Technical data

Rated impulse voltage for surge voltage class/ pollution degree II/2	6 kV	Rated impulse voltage for surge voltage class/ pollution degree III/2	8 kV
Rated impulse voltage for surge voltage class/ contamination degree III/3	8 kV	Short-time withstand current resistance	1 x 1s with 700 A

Rated data acc. to CSA

Rated voltage (Use group B / CSA)	300 V	Rated voltage (Use group C / CSA)	300 V
Rated voltage (Use group D / CSA)	600 V	Rated current (Use group B / CSA)	58 A
Rated current (Use group C / CSA)	58 A	Rated current (Use group D / CSA)	5 A
Wire cross-section, AWG, min.	AWG 22	Wire cross-section, AWG, max.	AWG 6

Rated data acc. to UL 1059

Rated voltage (Use group B / UL 1059)	300 V	Rated voltage (Use group C / UL 1059)	300 V
Rated voltage (Use group D / UL 1059)	600 V	Rated current (Use group B / UL 1059)	58 A
Rated current (Use group C / UL 1059)	58 A	Rated current (Use group D / UL 1059)	5 A
Wire cross-section, AWG, min.	AWG 26	Wire cross-section, AWG, max.	AWG 6

Packing

Packaging	Box	VPE length	227.00 mm
VPE width	136.00 mm	VPE height	46.00 mm

Type tests

Test: Durability of markings	Standard	DIN EN 61984 section 7.3.2 / 09.02 taking pattern from DIN EN 60068-2-70 / 07.96	
	Test	mark of origin, type identification, type of material, approval marking UL, durability	
	Evaluation	available	
	Standard	DIN EN 61984 section 7.3.2 / 09.02 taking pattern from DIN EN 60068-2-70 / 07.96	
	Test	approval marking CSA, approval marking SEV	
Test: Clampable cross section	Standard	DIN EN 60999-1 section 7 and 9.1 / 12.00, DIN EN 60947-1 section 8.2.4.5.1 / 12.02	
	Conductor type	Type of conductor and conductor cross-section	solid 0.5 mm²
		Type of conductor and conductor cross-section	stranded 0.5 mm²
		Type of conductor and conductor cross-section	solid 16 mm²
		Type of conductor and conductor cross-section	stranded 16 mm²
		Type of conductor and conductor cross-section	AWG 22/1
		Type of conductor and conductor cross-section	AWG 22/19
		Type of conductor and conductor cross-section	AWG 6/1
		Type of conductor and conductor cross-section	AWG 6/19
	Evaluation	passed	

LUP 10.16/05/90 5.0SN GY/GN BX SO

Weidmüller Interface GmbH & Co. KG
Klingenbergstraße 26
D-32758 Detmold
Germany

www.weidmueller.com

Technical data

Test for damage to and accidental loosening of conductors	Standard	DIN EN 60999-1 section 9.4 / 12.00	
	Requirement	0.2 kg	
	Conductor type	Type of conductor and conductor cross-section	AWG 22/1
		Type of conductor and conductor cross-section	AWG 22/19
	Evaluation	passed	
	Requirement	0.3 kg	
	Conductor type	Type of conductor and conductor cross-section	solid 0.5 mm²
		Type of conductor and conductor cross-section	stranded 0.5 mm²
	Evaluation	passed	
	Requirement	2.9 kg	
	Conductor type	Type of conductor and conductor cross-section	solid 16 mm²
		Type of conductor and conductor cross-section	stranded 16 mm²
		Type of conductor and conductor cross-section	AWG 6/7
	Evaluation	passed	
Pull-out test	Standard	DIN EN 60999-1 section 9.5 / 12.00	
	Requirement	≥15 N	
	Conductor type	Type of conductor and conductor cross-section	AWG 22/1
		Type of conductor and conductor cross-section	AWG 22/19
	Evaluation	passed	
	Requirement	≥20 N	
	Conductor type	Type of conductor and conductor cross-section	H05V-U0.5
		Type of conductor and conductor cross-section	H05V-K0.5
	Evaluation	passed	
	Requirement	≥100 N	
	Conductor type	Type of conductor and conductor cross-section	H07V-K16
		Type of conductor and conductor cross-section	H07V-U16
		Type of conductor and conductor cross-section	AWG 6/7
	Evaluation	passed	

Important note

IPC conformity	Conformity: The products are developed, manufactured and delivered according international recognized standards and norms and comply with the assured properties in the data sheet resp. fulfill decorative properties in accordance with IPC-A-610 "Class 2". Further claims on the products can be evaluated on request.

LUP 10.16/05/90 5.0SN GY/GN BX SO

Weidmüller Interface GmbH & Co. KG
Klingenbergstraße 26
D-32758 Detmold
Germany

www.weidmueller.com

Technical data

Notes	• Additional variants on request • Rated current related to rated cross-section & min. No. of poles. • Wire end ferrule without plastic collar to DIN 46228/1 • Wire end ferrule with plastic collar to DIN 46228/4 • The data given under CSA relates to a cUL approval - E60693 • P on drawing = pitch • Rated data refer only to the component itself. Clearance and creepage distances to other components are to be designed in accordance with the relevant application standards. • The test point can only be used as potential-pickup point. • Long term storage of the product with average temperature of 50 °C and maximum humidity 70%, 36 months

Classifications

ETIM 8.0	EC002643	ETIM 9.0	EC002643
ETIM 10.0	EC002643	ECLASS 14.0	27-46-01-01
ECLASS 15.0	27-46-01-01		

LUP 10.16/05/90 5.0SN GY/GN BX SO

Weidmüller Interface GmbH & Co. KG
Klingenbergstraße 26
D-32758 Detmold
Germany

www.weidmueller.com

Drawings

Dimensional drawing

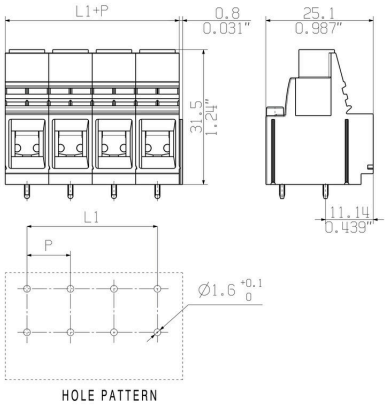

Graph

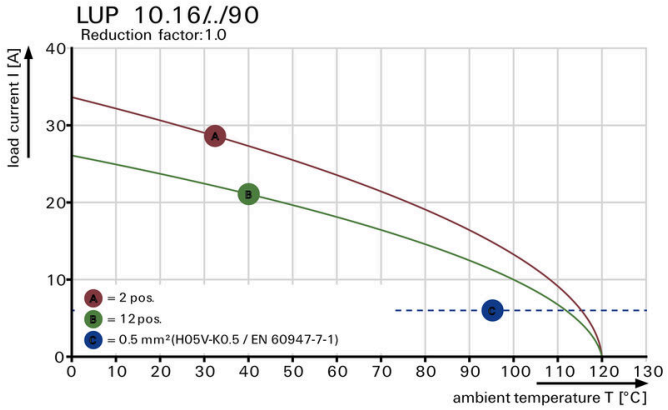

Graph

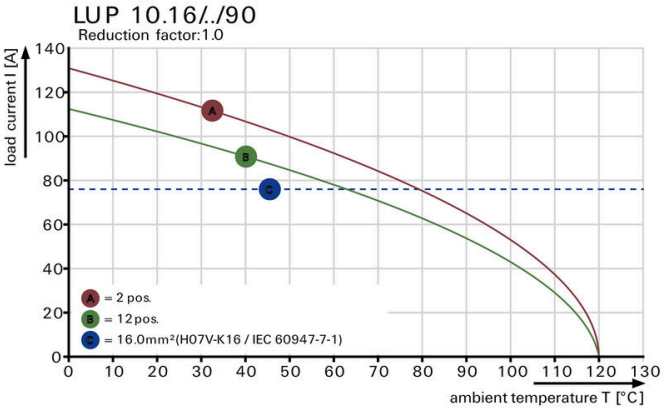

LUP 10.16/05/90 5.0SN GY/GN BX SO

Weidmüller Interface GmbH & Co. KG
Klingenbergstraße 26
D-32758 Detmold
Germany

www.weidmueller.com

Accessories

Crosshead screwdriver Pozidriv



VDE insulated crosshead screwdriver type Pozidriv SDIK PZ DIN 7438, ISO 8764/2-PZ, output to ISO 8764-PZ, SoftFinish grip

General ordering data

Type	SDIK PZ2	Version
Order No.	9008890000	Screwdriver, Screwdriver
GTIN (EAN)	4032248266661	
Qty.	1 ST	

Slotted screwdriver



VDE insulated slot-head screwdriver, SDI DIN 7437, ISO 2380/2, drive output acc. to DIN 5264, ISO 2380/1. SoftFinish grip

General ordering data

Type	SDIS 1.0X5.5X175	Version
Order No.	9205710000	Screwdriver, Screwdriver
GTIN (EAN)	4032248773015	
Qty.	1 ST	

Crosshead screwdriver Pozidriv



Crosshead screwdriver, Pozidriv, SDK PZ DIN 5262, ISO 8764/2-PZ, output to ISO 8764/1-PZ, ChromTop tip, SoftFinish grip

General ordering data

Type	SDK PZ2	Version
Order No.	9008540000	Screwdriver, Screwdriver
GTIN (EAN)	4032248056538	
Qty.	1 ST	

LUP 10.16/05/90 5.0SN GY/GN BX SO

Weidmüller Interface GmbH & Co. KG
Klingenbergstraße 26
D-32758 Detmold
Germany

www.weidmueller.com

Accessories

Slotted screwdriver



Slotted screwdriver with rounded blade SD DIN 5265, ISO 2380/2, output to DIN 5264, ISO 2380/1. ChromTop tip, SoftFinish grip

General ordering data

Type	SDS 1.0X5.5X150	Version
Order No.	9008350000	Screwdriver, Screwdriver
GTIN (EAN)	4032248056316	
Qty.	1 ST	