Data sheet

SAIL-M12W-L-1.5PGR

Weidmüller Interface GmbH & Co. KG
Klingenbergstraße 26
D-32758 Detmold
Germany

www.weidmueller.com



Your peripheral devices should be supplied with greater power. With our new M12 plug-in connector, more than 250 V and 2 A is possible without problems. The compact A-, K-, L-, S- and T-coded M12 plug-in connectors are designed for the transmission of up to 630 V AC or 60 V DC and 12 A.

General ordering data

Version	Sensor/actuator line, One end without connector, M12, Number of poles : 5, 1.5 m, pin, 90°, Shielded: No, LED: No, Sheath material: PUR, Halogen: No
Order No.	2455240150
Type	SAIL-M12W-L-1.5PGR
GTIN (EAN)	4050118470208
Qty.	1 items

Data sheet

SAIL-M12W-L-1.5PGR

Weidmüller Interface GmbH & Co. KG
Klingenbergstraße 26
D-32758 Detmold
Germany

www.weidmueller.com

Technical data

Approvals

Approvals	
ROHS	Conform
UL File Number Search	UL Website
Certificate no. (cULus)	E257571

Dimensions and weights

Net weight	100 g

Environmental Product Compliance

RoHS Compliance Status	Compliant with exemption
RoHS Exemption (if applicable/known)	6c
REACH SVHC	Lead 7439-92-1
SCIP	e8d8af70-4c85-4483-bc8c-9bc5b598e2a9

Technical specifications for cable

Cable length	1.5 m	Sheathing colour	grey
Suitable for cable carriers	Yes	Core cross-section	1.5 mm²
Shielded	No	Halogen	No
Insulation	PP	Acceleration	5 m/s²
Bending radius, min., moving	7.5 x cable diameter	Bending radius, min., stationary	4 x cable diameter
Bending cycles	10 Mio	Speed	5 m/s
Sheath material	PUR	Cable length configurable	No
Outer cladding in accordance with UL AWM style	20939 (80 °C / 600 V)	Irradiation crosslinked	No
Welding spark resistance	No	Colour coding	brown, white, blue, black, pink
Temperature range, stationary	-40...80 °C	Resistant to welding beads	No
Temperature range, moving	-30...80 °C	Number of poles	5
Outside diameter	8 mm ± 0.2 mm		

General technical data

Coding	L-coded	Connection thread	M12
Contact surface	Gold-plated	LED	No
Version	pin, 90°	Housing main material	PUR
Insulation resistance	108 Ω	Nominal voltage	50 V
Nominal current	16 A	Protection degree	IP65, IP67, when screwed in
Plugging cycles	≤ 100	Pollution severity	3
jumpered	No	Temperature range of housing	-40 ... +85 ° C
Tightening torque	M12: 0.8 - 1.2 Nm		

Electrical properties

Insulation resistance	108 Ω	Nominal voltage	50 V

General standards

Connector standard	IEC 61076-2-111	Certificate no. (cULus)	E257571

SAIL-M12W-L-1.5PGR

Weidmüller Interface GmbH & Co. KG
Klingenbergstraße 26
D-32758 Detmold
Germany

www.weidmueller.com

Technical data

Standards

Connector standard	IEC 61076-2-111

Plug, left

Plug left	M12, L-coded, IP67, male contact, angled 90°, Plastic, unshielded

Plug, right

Plug right	free conductor end

Classifications

ETIM 8.0	EC001855	ETIM 9.0	EC001855
ETIM 10.0	EC001855	ECLASS 14.0	27-06-03-11
ECLASS 15.0	27-06-03-11		

SAIL-M12W-L-1.5PGR

Weidmüller Interface GmbH & Co. KG
Klingenbergstraße 26
D-32758 Detmold
Germany

www.weidmueller.com

Drawings

Dimensioned drawing

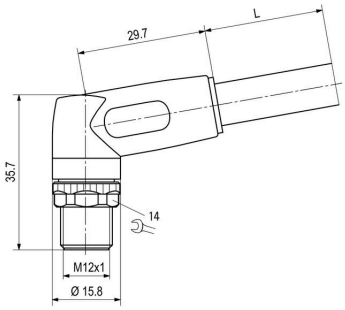

Pole scheme

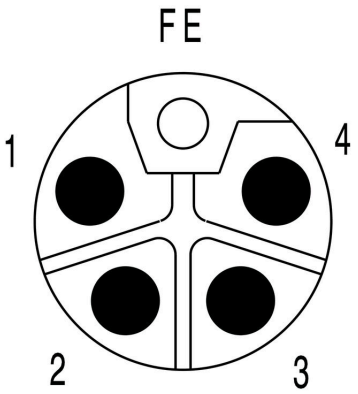

Wiring diagram

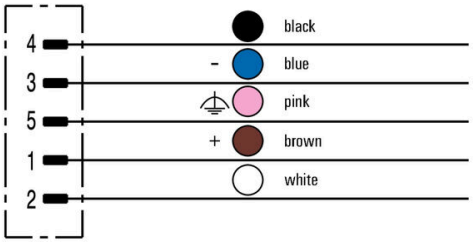

The ideal tool: Screwty ® with torque function

