Data sheet

SCZ 3.81/04/180LRZE SN BK BX

Weidmüller Interface GmbH & Co. KG
Klingenbergstraße 26
D-32758 Detmold
Germany

www.weidmueller.com

Product image

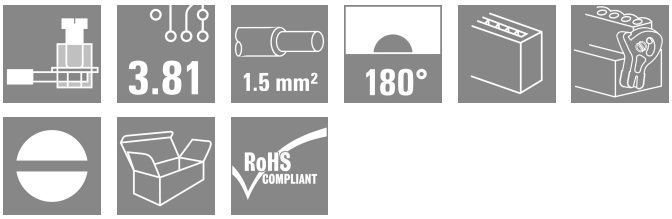

The inverted SCZ pin plug with clamping-yoke screw connection is designed for straight wire outlet connections. It can be used in two ways:

- for wire-to-wire connections together with the BCZ
- As a mating plug for the touch-safe BCL-SMT socket block on the PCB.

The SCZ is available in four different versions:

- Without flange ("G", closed)
- With standard flange ("F", with nut) for wire-to-wire connections
- With inverted flange ("FI", with screw) for screw connection to the BCL-SMT LFI
- With Weidmüller's patented release latch (LR) for lock-and-release latching with the BCL-SMT LFI: no strain and no tools needed.

Weidmüller's 3.81-mm-pitch (0.15 inch) plug-in connectors are compatible with the layouts of standard connectors and offer space for labelling and coding.

General ordering data

Version	PCB plug-in connector, male plug, 3.81 mm, Number of poles: 4, 180°, Clamping yoke connection, Clamping range, max. : 1.5 mm², Box
Order No.	2444210000
Type	SCZ 3.81/04/180LRZE SN BK BX
GTIN (EAN)	4050118542592
Qty.	50 items
Product data	IEC: 320 V / 17.5 A / 0.2 - 1.5 mm² UL: 300 V / 10 A / AWG 28 - AWG 16
Packaging	Box

SCZ 3.81/04/180LRZE SN BK BX

Weidmüller Interface GmbH & Co. KG
Klingenbergstraße 26
D-32758 Detmold
Germany

www.weidmueller.com

Technical data

Approvals

Approvals	cULus
ROHS	Conform
UL File Number Search	UL Website
Certificate No. (cURus)	E60693

Dimensions and weights

Depth	42.1 mm	Depth (inches)	1.6575 inch
Height	16.6 mm	Height (inches)	0.6535 inch
Net weight	6.72 g		

Environmental Product Compliance

RoHS Compliance Status	Compliant with exemption
RoHS Exemption (if applicable/known)	6c
REACH SVHC	Lead 7439-92-1
SCIP	cec56c8c-fe86-40ec-b01a-efe288a878ac

System Parameters

Product family	OMNIMATE Signal - series BC/SC 3.81
Type of connection	Field connection
Wire connection method	Clamping yoke connection
Pitch in mm (P)	3.81 mm
Pitch in inches (P)	0.150 "
Conductor outlet direction	180°
Number of poles	4
L1 in mm	11.43 mm
L1 in inches	0.450 "
Number of rows	1
Pin series quantity	1
Rated cross-section	1 mm²
Touch-safe protection acc. to DIN VDE 57 106	finger-safe plugged/ back-of-hand-safe unplugged
Touch-safe protection acc. to DIN VDE 0470	IP20 plugged/ IP10 unplugged
Volume resistance	≤5 mΩ
Can be coded	Yes
Stripping length	7 mm
Clamping screw	M 2
Screwdriver blade	0.4 x 2.5
Screwdriver blade standard	DIN 5264
Plugging cycles	25
Plugging force/pole, max.	8 N
Pulling force/pole, max.	5 N
Tightening torque	Torque type: Wire connection Usage information: Tightening torque min. 0.2 Nm, max. 0.25 Nm

Material data

Insulating material	PA 66 GF 30	Colour	black
Colour chart (similar)	RAL 9011	Insulating material group	II

SCZ 3.81/04/180LRZE SN BK BX

Weidmüller Interface GmbH & Co. KG
Klingenbergstraße 26
D-32758 Detmold
Germany

www.weidmueller.com

Technical data

Comparative Tracking Index (CTI)	≥ 550	Moisture Level (MSL)	
UL 94 flammability rating	V-0	Contact material	Copper alloy
Contact surface	tinned	Layer structure of plug contact	4...8 µm Sn
Storage temperature, min.	-40 °C	Storage temperature, max.	70 °C
Operating temperature, min.	-50 °C	Operating temperature, max.	120 °C
Temperature range, installation, min.	-25 °C	Temperature range, installation, max.	120 °C

Conductors suitable for connection

Clamping range, min.	0.08 mm²			
Clamping range, max.	1.5 mm²			
Wire connection cross section AWG, min.	AWG 28			
Wire connection cross section AWG, max.	AWG 16			
Solid, min. H05(07) V-U	0.2 mm²			
Solid, max. H05(07) V-U	1.5 mm²			
Flexible, min. H05(07) V-K	0.2 mm²			
Flexible, max. H05(07) V-K	1.5 mm²			
w. plastic collar ferrule, DIN 46228 pt 4, min.	0.2 mm²			
w. plastic collar ferrule, DIN 46228 pt 4, max.	1.5 mm²			
w. wire end ferrule, DIN 46228 pt 1, min.	0.2 mm²			
w. wire end ferrule, DIN 46228 pt 1, max.	1.5 mm²			
Plug gauge in accordance with EN 60999 a x b; ø	2.4 mm x 1.5 mm ; 2.4 mm			
Clampable conductor	Cross-section for conductor connection	Type	fine-wired	
		nominal	0.5 mm²	
	wire end ferrule	Stripping length	nominal	6 mm
		Recommended wire-end ferrule	H0,5/6	
	Cross-section for conductor connection	Type	fine-wired	
		nominal	0.75 mm²	
	wire end ferrule	Stripping length	nominal	6 mm
		Recommended wire-end ferrule	H0,75/6	
	Cross-section for conductor connection	Type	fine-wired	
		nominal	1 mm²	
	wire end ferrule	Stripping length	nominal	6 mm
		Recommended wire-end ferrule	H1,0/6	
	Cross-section for conductor connection	Type	fine-wired	
		nominal	1.5 mm²	
	wire end ferrule	Stripping length	nominal	7 mm
		Recommended wire-end ferrule	H1,5/7	
Reference text	The outside diameter of the plastic collar should not be larger than the pitch (P), Length of ferrules is to be chosen depending on the product and the rated voltage.			

Rated data acc. to IEC

tested acc. to standard	IEC 60664-1, IEC 61984	Rated current, min. number of poles (Tu=20°C)	17.5 A
Rated current, max. number of poles (Tu=20°C)	17.1 A	Rated current, min. number of poles (Tu=40°C)	17.5 A

SCZ 3.81/04/180LRZE SN BK BX

Weidmüller Interface GmbH & Co. KG
Klingenbergstraße 26
D-32758 Detmold
Germany

www.weidmueller.com

Technical data

Rated current, max. number of poles (Tu=40°C)	15.2 A	Rated voltage for surge voltage class / pollution degree II/2	320 V
Rated voltage for surge voltage class / pollution degree III/2	160 V	Rated voltage for surge voltage class / pollution degree III/3	160 V
Rated impulse voltage for surge voltage class/ pollution degree II/2	2.5 kV	Rated impulse voltage for surge voltage class/ pollution degree III/2	2.5 kV
Rated impulse voltage for surge voltage class/ contamination degree III/3	2.5 kV	Short-time withstand current resistance	3 x 1s with 76 A

Rated data acc. to CSA

Rated voltage (Use group B / CSA)	300 V	Rated voltage (Use group C / CSA)	50 V
Rated current (Use group B / CSA)	10 A	Rated current (Use group C / CSA)	10 A
Wire cross-section, AWG, min.	AWG 28	Wire cross-section, AWG, max.	AWG 16

Rated data acc. to UL 1059

Institute (cURus)	CURUS	Certificate No. (cURus)	E60693
Rated voltage (Use group B / UL 1059)	300 V	Rated voltage (Use group D / UL 1059)	300 V
Rated current (Use group B / UL 1059)	10 A	Rated current (Use group D / UL 1059)	10 A
Wire cross-section, AWG, min.	AWG 28	Wire cross-section, AWG, max.	AWG 16
Reference to approval values	Specifications are maximum values, details - see approval certificate.		

Packing

Packaging	Box	VPE length	165.00 mm
VPE width	118.00 mm	VPE height	46.00 mm

Type tests

Test: Durability of markings	Standard	DIN EN 61984 section 7.3.2 / 09.02 taking pattern from DIN EN 60068-2-70 / 07.96	
	Test	mark of origin, type identification, rated voltage, rated cross-section, pitch, type of material, approval marking UL, approval marking CSA	
	Evaluation	available	
	Test	durability	
	Evaluation	passed	
Test: Misengagement (Non-interchangeability)	Standard	DIN EN 61984 section 6.3 and 6.9.1 / 09.02, DIN EN 60512-13-5 / 11.06	
	Test	180° turned without coding elements	
	Evaluation	passed	
	Test	visual examination	
	Evaluation	passed	
Test: Clampable cross section	Standard	DIN EN 60999-1 section 7 and 9.1 / 12.00, DIN EN 60947-1 section 8.2.4.5.1 / 12.02	
	Conductor type	Type of conductor and conductor cross-section	solid 0.08 mm²
		Type of conductor and conductor cross-section	stranded 0.08 mm²
		Type of conductor and conductor cross-section	solid 1.5 mm²
		Type of conductor and conductor cross-section	stranded 1.5 mm²

Weidmüller Interface GmbH & Co. KG
Klingenbergstraße 26
D-32758 Detmold
Germany

www.weidmueller.com

Technical data

		Type of conductor and conductor cross-section	AWG 28/1
		Type of conductor and conductor cross-section	AWG 28/19
		Type of conductor and conductor cross-section	AWG 16/1
		Type of conductor and conductor cross-section	AWG 16/19
	Evaluation	passed	
Test for damage to and accidental loosening of conductors	Standard	DIN EN 60999-1 section 9.4 / 12.00	
	Requirement	0.2 kg	
	Conductor type	Type of conductor and conductor cross-section	stranded 0.25 mm²
		Type of conductor and conductor cross-section	AWG 28/1
		Type of conductor and conductor cross-section	AWG 28/19
	Evaluation	passed	
	Requirement	0.3 kg	
	Conductor type	Type of conductor and conductor cross-section	solid 0.5 mm²
	Evaluation	passed	
	Requirement	0.4 kg	
	Conductor type	Type of conductor and conductor cross-section	solid 1.5 mm²
		Type of conductor and conductor cross-section	stranded 1.5 mm²
		Type of conductor and conductor cross-section	AWG 16/1
		Type of conductor and conductor cross-section	AWG 16/19
	Evaluation	passed	
Pull-out test	Standard	DIN EN 60999-1 section 9.5 / 12.00	
	Requirement	≥10 N	
	Conductor type	Type of conductor and conductor cross-section	stranded 0.25 mm²
		Type of conductor and conductor cross-section	AWG 28/1
		Type of conductor and conductor cross-section	AWG 28/19
	Evaluation	passed	
	Requirement	≥20 N	
	Conductor type	Type of conductor and conductor cross-section	H05V-U0.5
	Evaluation	passed	
	Requirement	≥40 N	

SCZ 3.81/04/180LRZE SN BK BX

Weidmüller Interface GmbH & Co. KG
Klingenbergstraße 26
D-32758 Detmold
Germany

www.weidmueller.com

Technical data

	Conductor type	Type of conductor and conductor cross-section	H07V-U1.5
		Type of conductor and conductor cross-section	H07V-K1.5
		Type of conductor and conductor cross-section	AWG 16/1
		Type of conductor and conductor cross-section	AWG 16/19
	Evaluation	passed	

Important note

IPC conformity	Conformity: The products are developed, manufactured and delivered according international recognized standards and norms and comply with the assured properties in the data sheet resp. fulfill decorative properties in accordance with IPC-A-610 "Class 2". Further claims on the products can be evaluated on request.
Notes	• Additional variants on request • Rated current related to rated cross-section & min. No. of poles. • Wire end ferrule with plastic collar to DIN 46228/4 • P on drawing = pitch • Rated data refer only to the component itself. Clearance and creepage distances to other components are to be designed in accordance with the relevant application standards. • In accordance with IEC 61984, OMNIMATE-connectors are connectors without breaking capacity (COC). During designated use, connectors are not allowed to be engaged or disengaged when live or under load • Long term storage of the product with average temperature of 50 °C and maximum humidity 70%, 36 months

Classifications

ETIM 8.0	EC002638	ETIM 9.0	EC002638
ETIM 10.0	EC002638	ECLASS 14.0	27-46-02-02
ECLASS 15.0	27-46-02-02		

SCZ 3.81/04/180LRZE SN BK BX

Weidmüller Interface GmbH & Co. KG
Klingenbergstraße 26
D-32758 Detmold
Germany

www.weidmueller.com

Drawings

Product image

Dimensional drawing

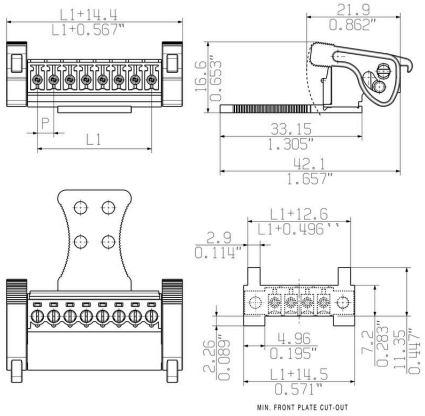

Graph

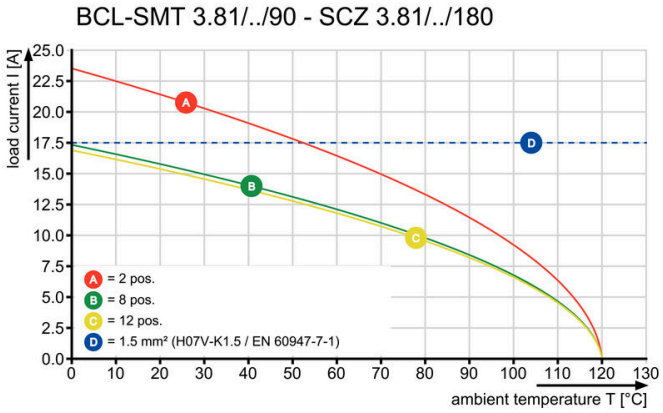

Graph

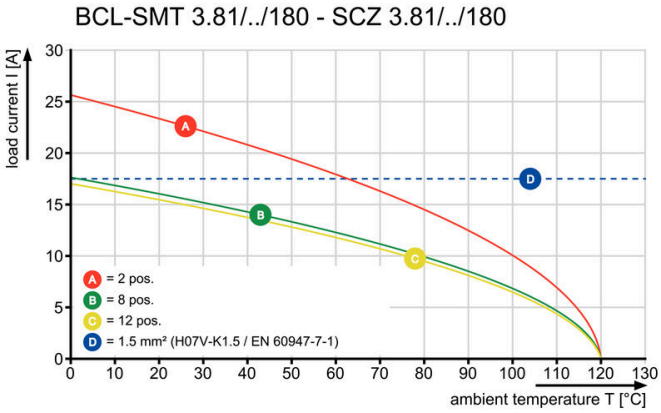
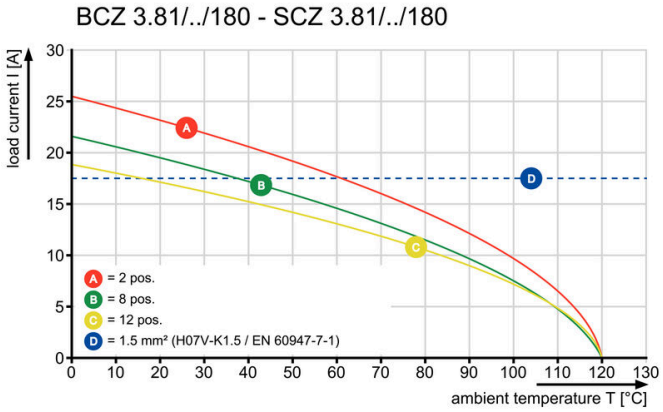
Graph