Data sheet

IE-FCI-PWB-FR/B/CZ

Weidmüller Interface GmbH & Co. KG
Klingenbergstraße 26
D-32758 Detmold
Germany

www.weidmueller.com

FrontCom® Vario integrates multiple functions in only one single frame. The system is easy to install and you can select from a wide range of data, signal and power modules. In addition to being extremely compact, FrontCom® Vario offers a number of unique product features that will make your project planning and work activities secure, fast and future-proof. Furthermore, the FrontCom® Vario system has an attractive housing design that, by the way, offers highest impact-resistance and fully meets the requirements of IP 65 protection class.

General ordering data

Version	FrontCom, Insert Power large, Type E, Socket connector, FR, CZ
Order No.	2426700000
Type	IE-FCI-PWB-FR/B/CZ
GTIN (EAN)	4050118435139
Qty.	1 items

IE-FCI-PWB-FR/B/CZ

Weidmüller Interface GmbH & Co. KG
Klingenbergstraße 26
D-32758 Detmold
Germany

www.weidmueller.com

Technical data

Approvals

Approvals	CE
ROHS	Conform

Dimensions and weights

Net weight	32 g

Temperatures

Storage temperature		Operating temperature	-5 °C...35 °C
Installation temperature			

Environmental Product Compliance

RoHS Compliance Status	Compliant without exemption
REACH SVHC	No SVHC above 0.1 wt%

General data

Protection degree	IP20	Insert type	Insert Power large
Connector face	Type E	Fire load	840 kJ

Clampable conductors

Stripping length	12 mm	
Type of connection	PUSH IN	
Conductor connection cross-section, extremely flexible with wire end ferrule	min.	1.5 mm²
	max.	1.5 mm²
Conductor connection cross-section, extremely flexible without wire end ferrule	min.	1.5 mm²
	max.	2.5 mm²
Conductor connection cross-section, rigid	min.	1.5 mm²
	max.	2.5 mm²
Conductor connection cross-section, flexible with wire end ferrule	min.	1.5 mm²
	max.	1.5 mm²
Conductor connection cross-section, flexible without wire end ferrule	1.5 ... 2.5 mm²	
Conductor connection cross-section, extremely flexible without wire end ferrule	1.5 ... 2.5 mm²	
Conductor connection cross-section, rigid	1.5 ... 2.5 mm²	
Conductor connection cross-section, flexible with wire end ferrule	1.5 ... 1.5 mm²	
Conductor connection cross-section, flexible without wire end ferrule	min.	1.5 mm²
	max.	2.5 mm²
Conductor connection cross-section, extremely flexible with wire end ferrule	1.5 ... 1.5 mm²	

Technical data

Rated voltage (AC)	250 V	Housing main material	Polycarbonate PC
Nominal current	16 A		

IE-FCI-PWB-FR/B/CZ

Weidmüller Interface GmbH & Co. KG
Klingenbergstraße 26
D-32758 Detmold
Germany

www.weidmueller.com

Technical data

Classifications

ETIM 8.0	EC001121	ETIM 9.0	EC001121
ETIM 10.0	EC001121	ECLASS 14.0	27-18-28-92
ECLASS 15.0	27-18-28-92		

Weidmüller Interface GmbH & Co. KG
Klingenbergstraße 26
D-32758 Detmold
Germany

www.weidmueller.com

Drawings

Dimensioned drawing

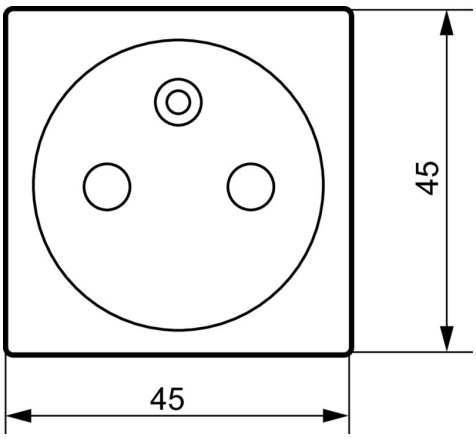

Dimensioned drawing

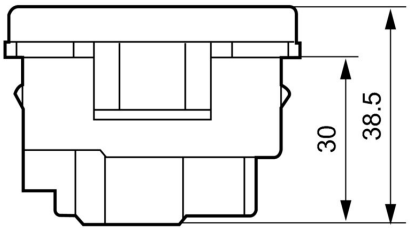

IE-FCI-PWB-FR/B/CZ

Weidmüller Interface GmbH & Co. KG
Klingenbergstraße 26
D-32758 Detmold
Germany

www.weidmueller.com

Accessories

Rail adaptor for socket inserts

At Weidmüller you can get everything you need from one source - including accessories for Industrial Ethernet.
The benefits for you:
- tools
- testing instruments
- cable bushings
- cabinet connections
- markers
- dust protection
- power packs
- overvoltage protection

General ordering data

Type	IE-DINRAIL-AD-PWB	Version
Order No.	2534680000	
GTIN (EAN)	4050118546354	
Qty.	1 ST	