Data sheet

SAIE-M12BB-5S-9/14SMT

Weidmüller Interface GmbH & Co. KG
Klingenbergstraße 26
D-32758 Detmold
Germany

www.weidmueller.com

Similar to illustration

Weidmüller is one of the industry's leading international providers of connectors. An important mainstay in this product family are the circular connectors, which Weidmüller groups under the product name SAI. In the development of SAI products, Weidmüller engineers have always concentrated on achieving rational, cost-effective installation concepts, and – in cooperation with major users – have supplied the markets with well-conceived products which set standards in terms of functionality and quality across the globe. The best examples are the new power distributors with S and T coded M12. These modules are characterised by particularly high currents and voltages. This enables them to also be used, for example, with three-phase motors.

General ordering data

Version	Built-in plugs, M12, Mounting thread: M 14, Number of poles: 5, Strand / cable length:
Order No.	2423710000
Type	SAIE-M12BB-5S-9/14SMT
GTIN (EAN)	4050118432015
Qty.	25 items

SAIE-M12BB-5S-9/14SMT

Weidmüller Interface GmbH & Co. KG
Klingenbergstraße 26
D-32758 Detmold
Germany

www.weidmueller.com

Technical data

Approvals

ROHS	Conform

Dimensions and weights

Net weight	8.1 g

Environmental Product Compliance

RoHS Compliance Status	Compliant with exemption
RoHS Exemption (if applicable/known)	6c
REACH SVHC	Lead 7439-92-1
SCIP	0ea6d931-f9e9-40a6-89d9-8d67103189d3

Technical data of PCB plug-in connector

Number of poles	5	
Coding	B-coded	
Housings	M12 socket	
Installation height	9 mm	
Housing surface	nickel-plated	
Shield connection	Yes	
Mounting thread	M14	
Nominal voltage	60 V	
Rated voltage	250 V (4-pole) / 60 V (5-pole)	
Nominal current	4 A	
Rated current	4 A	
Temperature range	-30...80 °C	
Protection degree	IP67	
Contact surface	Au (Gold)	
Housing main material	CuZn, nickel-plated	
Connection thread	M12	
Tightening torque	M12: 0.8 Nm	
Mounting thread	M 14	
Mounting torque range	1.2 Nm	
Mounting torque	max.	1.2 Nm
Mounting onto the PCB	SMD solder connection	
Insulation resistance	100 MΩ	
Pollution severity	3 (2 within the sealed area)	
Plugging cycles	≥ 100	
Contact material	Cu-alloy	
Lock nut material	Nickel-plated CuZn	
Material of the flange-mounted housing	Nickel-plated CuZn	

General Info

Number of poles	5	Housing main material	CuZn, nickel-plated
Connection thread	M12	Contact material	Cu-alloy
Contact surface	Au (Gold)	Protection degree	IP67
Plugging cycles	≥ 100		

Material data

Contact material	Cu-alloy	Contact surface	Au (Gold)

SAIE-M12BB-5S-9/14SMT

Weidmüller Interface GmbH & Co. KG
Klingenbergstraße 26
D-32758 Detmold
Germany

www.weidmueller.com

Technical data

System parameters

Mounting onto the PCB	SMD solder connection	Number of poles	5
Pin series quantity	1	Insulation resistance	100 MΩ
Protection degree	IP67	Plugging cycles	≥ 100

Important note

Notes

Classifications

ETIM 8.0	EC003568	ETIM 9.0	EC003568
ETIM 10.0	EC003568	ECLASS 14.0	27-44-01-10
ECLASS 15.0	27-44-01-10		

SAIE-M12BB-5S-9/14SMT

Weidmüller Interface GmbH & Co. KG
Klingenbergstraße 26
D-32758 Detmold
Germany

www.weidmueller.com

Drawings

Dimensioned drawing

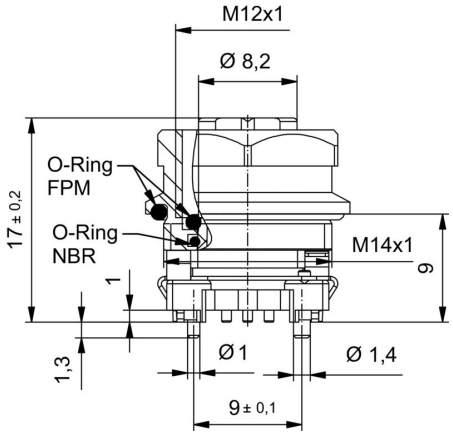

Pole scheme

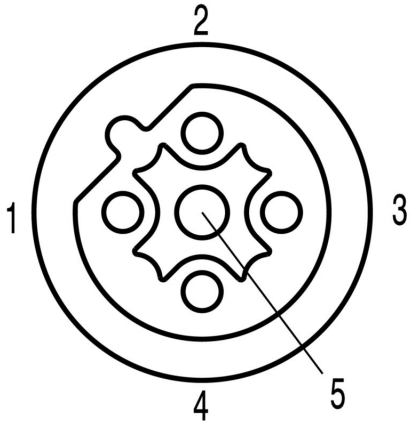
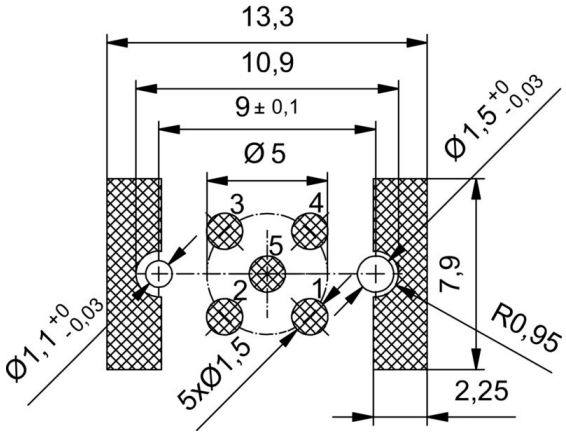
PCB design