Data sheet

SAIE-M12S-4-F5.5TL

Weidmüller Interface GmbH & Co. KG
Klingenbergstraße 26
D-32758 Detmold
Germany

www.weidmueller.com

Weidmüller is one of the industry's leading international providers of connectors. An important mainstay in this product family are the circular connectors, which Weidmüller groups under the product name SAI. In the development of SAI products, Weidmüller engineers have always concentrated on achieving rational, cost-effective installation concepts, and – in cooperation with major users – have supplied the markets with well-conceived products which set standards in terms of functionality and quality across the globe. The best examples are the new power distributors with S and T coded M12. These modules are characterised by particularly high currents and voltages. This enables them to also be used, for example, with three-phase motors.

General ordering data

Version	Built-in plugs, M12, Mounting thread: M 12, Number of poles: 4, Strand / cable length:
Order No.	2423060000
Type	SAIE-M12S-4-F5.5TL
GTIN (EAN)	4050118431490
Qty.	10 items

SAIE-M12S-4-F5.5TL

Weidmüller Interface GmbH & Co. KG
Klingenbergstraße 26
D-32758 Detmold
Germany

www.weidmueller.com

Technical data

Approvals

ROHS	Conform

Dimensions and weights

Net weight	6.6 g

Environmental Product Compliance

RoHS Compliance Status	Compliant with exemption
RoHS Exemption (if applicable/known)	6c
REACH SVHC	Lead 7439-92-1
SCIP	0ea6d931-f9e9-40a6-89d9-8d67103189d3

Technical data of PCB plug-in connector

Number of poles	4	
Coding	A-coded	
Type of mounting	Front mounting	
Housings	M12 pin	
Installation height	5.5 mm	
Housing surface	nickel-plated	
Shield connection	No	
Mounting thread	M12	
Nominal voltage	250 V	
Rated voltage	250 V (4-pole) / 60 V (5-pole)	
Nominal current	4 A	
Rated current	4 A	
Temperature range	-30...80 °C	
Protection degree	IP67	
Contact surface	Au (Gold)	
Housing main material	CuZn, nickel-plated	
Connection thread	M12	
Tightening torque	M12: 0.8 Nm	
Mounting thread	M 12	
Mounting torque range	1.2 Nm	
Mounting torque	max.	1.2 Nm
Insulation resistance	100 MΩ	
Pollution severity	3 (2 within the sealed area)	
Plugging cycles	≥ 100	
Contact material	Cu-alloy	
Lock nut material	Nickel-plated CuZn	
Material of the flange-mounted housing	Nickel-plated CuZn	

General Info

Number of poles	4	Housing main material	CuZn, nickel-plated
Connection thread	M12	Contact material	Cu-alloy
Contact surface	Au (Gold)	Type of mounting	Front mounting
Protection degree	IP67	Plugging cycles	≥ 100

Material data

Contact material	Cu-alloy	Contact surface	Au (Gold)

SAIE-M12S-4-F5.5TL

Weidmüller Interface GmbH & Co. KG
Klingenbergstraße 26
D-32758 Detmold
Germany

www.weidmueller.com

Technical data

System parameters

Number of poles	4	Pin series quantity	1
Insulation resistance	100 MΩ	Protection degree	IP67
Plugging cycles	≥ 100		

Important note

Notes

Classifications

ETIM 6.0	EC002638	ETIM 7.0	EC003568
ETIM 8.0	EC003568	ETIM 9.0	EC003568
ETIM 10.0	EC003568	ECLASS 9.0	27-44-03-09
ECLASS 9.1	27-44-03-09	ECLASS 10.0	27-44-03-09
ECLASS 11.0	27-44-01-10	ECLASS 12.0	27-44-01-10
ECLASS 13.0	27-44-01-10	ECLASS 14.0	27-44-01-10
ECLASS 15.0	27-44-01-10		

SAIE-M12S-4-F5.5TL

Weidmüller Interface GmbH & Co. KG
Klingenbergstraße 26
D-32758 Detmold
Germany

www.weidmueller.com

Drawings

Dimensioned drawing

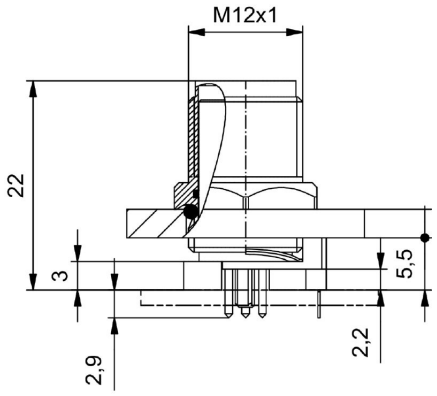

PCB design

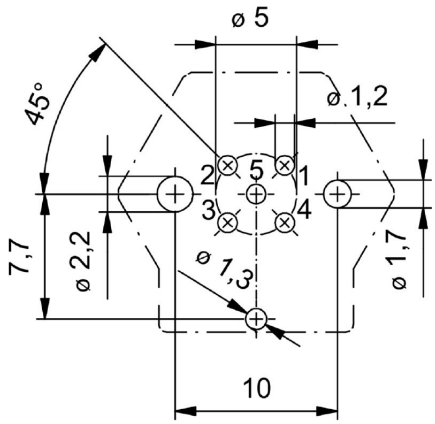

Front panel section

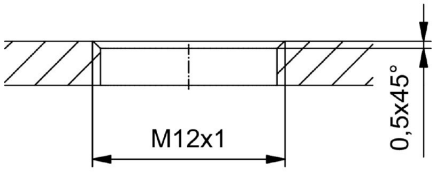
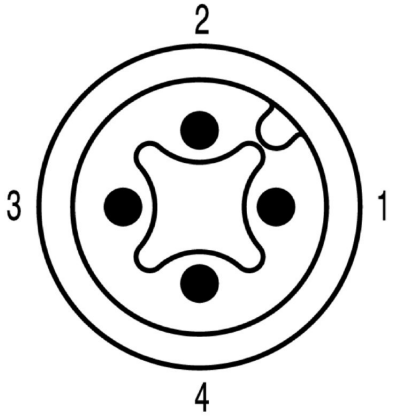
Pole scheme