Data sheet

SAID-M8B-4-SMT

Weidmüller Interface GmbH & Co. KG
Klingenbergstraße 26
D-32758 Detmold
Germany

www.weidmueller.com

Similar to illustration

Weidmüller is one of the industry's leading international providers of connectors. An important mainstay in this product family are the circular connectors, which Weidmüller groups under the product name SAI. In the development of SAI products, Weidmüller engineers have always concentrated on achieving rational, cost-effective installation concepts, and – in cooperation with major users – have supplied the markets with well-conceived products which set standards in terms of functionality and quality across the globe. The best examples are the new power distributors with S and T coded M12. These modules are characterised by particularly high currents and voltages. This enables them to also be used, for example, with three-phase motors.

General ordering data

Version	Built-in plugs, M8, Mounting thread: , Number of poles: 4, Strand / cable length:
Order No.	2421840000
Type	SAID-M8B-4-SMT
GTIN (EAN)	4050118429626
Qty.	25 items

SAID-M8B-4-SMT

Weidmüller Interface GmbH & Co. KG
Klingenbergstraße 26
D-32758 Detmold
Germany

www.weidmueller.com

Technical data

Approvals

ROHS	Conform

Dimensions and weights

Net weight	2.48 g

Environmental Product Compliance

RoHS Compliance Status	Compliant with exemption
RoHS Exemption (if applicable/known)	6c
REACH SVHC	Lead 7439-92-1
SCIP	0ea6d931-f9e9-40a6-89d9-8d67103189d3

Technical data of PCB plug-in connector

Number of poles	4	Coding	M8 = none
Housings	M8 socket	Shield connection	No
Nominal voltage	30 V	Rated voltage	60 V (3-pole) / 30 V (4-,5- and 8-pole)
Nominal current	4 A	Rated current	4 A (3-, 4- and 5-pole) / 1.5 A (8-pole)
Temperature range	-25...95 °C	Protection degree	IP67
Contact surface	Au (Gold)	Housing main material	LCP
Connection thread	M8	Tightening torque	M8: 0.5 Nm
Pollution severity	3 (2 within the sealed area)	Plugging cycles	≥ 100
Contact material	Cu-alloy	Lock nut material	Nickel-plated CuZn
Material of the flange-mounted housing	Nickel-plated CuZn		

General Info

Number of poles	4	UL 94 flammability rating	V-0
Housing main material	LCP	Connection thread	M8
Contact material	Cu-alloy	Contact surface	Au (Gold)
Protection degree	IP67	Plugging cycles	≥ 100

Material data

UL 94 flammability rating	V-0	Contact material	Cu-alloy
Contact surface	Au (Gold)		

System parameters

Number of poles	4	Pin series quantity	1
Protection degree	IP67	Plugging cycles	≥ 100

Important note

Notes

Classifications

ETIM 8.0	EC003557	ETIM 9.0	EC003557
ETIM 10.0	EC003557	ECLASS 14.0	27-44-02-23
ECLASS 15.0	27-44-02-23		

SAID-M8B-4-SMT

Weidmüller Interface GmbH & Co. KG
Klingenbergstraße 26
D-32758 Detmold
Germany

www.weidmueller.com

Drawings

Dimensioned drawing

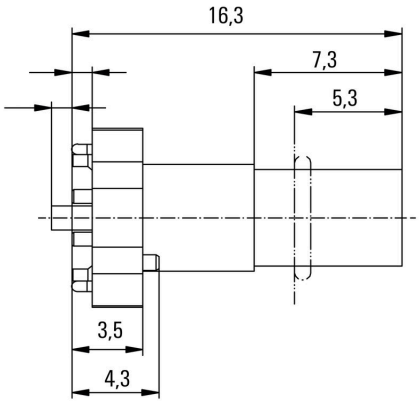

PCB design

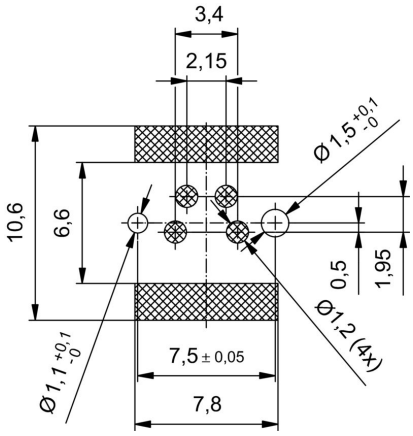

Pole scheme

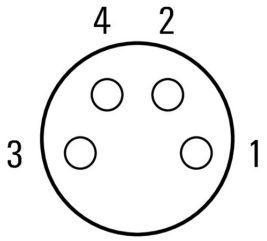

M8 = none

SAID-M8B-4-SMT

Weidmüller Interface GmbH & Co. KG
Klingenbergstraße 26
D-32758 Detmold
Germany

www.weidmueller.com

Accessories

Accessories

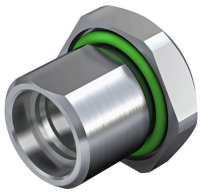

Weidmüller is one of the industry's leading international providers of connectors. An important mainstay in this product family are the circular connectors, which Weidmüller groups under the product name SAI. In the development of SAI products, Weidmüller engineers have always concentrated on achieving rational, cost-effective installation concepts, and – in cooperation with major users – have supplied the markets with well-conceived products which set standards in terms of functionality and quality across the globe. The best examples are the new power distributors with S and T coded M12. These modules are characterised by particularly high currents and voltages. This enables them to also be used, for example, with three-phase motors.

General ordering data

Type	SAIFG-M8B-M10-13	Version
Order No.	2424460000	Built-in plugs, M8 socket, Installation height: 13 mm
GTIN (EAN)	4050118432602	
Qty.	25 ST	
Type	SAIFG-M8B-M10-9	Version
Order No.	2424430000	Built-in plugs, M8 socket, Installation height: 9 mm
GTIN (EAN)	4050118432442	
Qty.	25 ST	
Type	SAIHG-M8B-M12-10	Version
Order No.	2424500000	Built-in plugs, M8 socket, Installation height: 10 mm
GTIN (EAN)	4050118432503	
Qty.	25 ST	
Type	SAIHG-M8B-M12-6	Version
Order No.	2424480000	Built-in plugs, M8 socket, Installation height: 6 mm
GTIN (EAN)	4050118431476	
Qty.	25 ST	
Type	SAIE-KMM12X1-SW14	Version
Order No.	2424570000	Built-in plugs
GTIN (EAN)	4050118432473	
Qty.	25 ST	
Type	SAIE-KMM10X1-SW12	Version
Order No.	2424560000	Built-in plugs
GTIN (EAN)	4050118432107	
Qty.	25 ST	