Data sheet

TRS 48VUC 1CO AGSNO

Weidmüller Interface GmbH & Co. KG
Klingenbergstraße 26
D-32758 Detmold
Germany

www.weidmueller.com

Product image

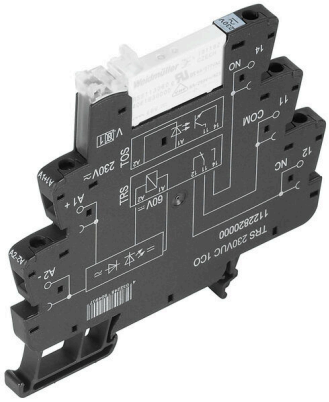

Similar to illustration

- 1 CO contact
- Contact material: AgSnO
- Unique multi-voltage input from 24 to 230 V UC
- Input voltages from 5 V DC to 230 V UC with coloured marking: AC: red, DC: blue, UC: white

General ordering data

Version	TERMSERIES, Relay module, Number of contacts: 1, CO contact AgSnO, Rated control voltage: 48 V UC ±10 %, Continuous current: 6 A, Screw connection, Test button available: No
Order No.	2153060000
Type	TRS 48VUC 1CO AGSNO
GTIN (EAN)	4050118427202
Qty.	10 items

TRS 48VUC 1CO AGSNO

Weidmüller Interface GmbH & Co. KG
Klingenbergstraße 26
D-32758 Detmold
Germany

www.weidmueller.com

Technical data

Approvals

Approvals	
ROHS	Conform
UL File Number Search	UL Website
Certificate no. (cULus)	E141197

Dimensions and weights

Depth	87.8 mm	Depth (inches)	3.4567 inch
Height	89.6 mm	Height (inches)	3.5276 inch
Width	6.4 mm	Width (inches)	0.252 inch
Net weight	31.06 g		

Temperatures

Storage temperature	-40 °C...85 °C	Ambient temperature	-40 °C...60 °C
Operating temperature		Humidity	5-95% relative humidity, Tu = 40°C, without condensation

Environmental Product Compliance

RoHS Compliance Status	Compliant with exemption
RoHS Exemption (if applicable/known)	7a, 7cl
REACH SVHC	Lead 7439-92-1
SCIP	9e2cbc49-76d9-4611-b8ec-5b4f549a0aa9

Rated data UL

Ambient temperature (operational), max.	60 °C	Output current derating (ohmic)	5 A @ 60 °C, 6 A @ 55 °C
Connection cross-section AWG, min.	AWG 26	Connection cross-section AWG, max.	AWG 14
Type of conductor	rigid copper conductor, flexible copper conductor	Tightening torque, max.	0.4 Nm
Pollution severity level	2		

Control side

Rated control voltage	48 V UC ±10 %	Rated current AC	8 mA
Rated current DC	7 mA	Power rating	340 mW / 0.4 VA
Status indicator	Green LED	Protective circuit	Rectifier
Coil voltage of the replacement relay deviating from the rated control voltage	Yes	Coil voltage of the replacement relay	24 V DC

Load side

Rated switching voltage	250 V AC	Continuous current	6 A
Max. switching frequency at rated load	0.1 Hz	Max. switching voltage, AC	250 V
Max. switching voltage, DC	250 V	Inrush current	30 A / 20 ms
AC switching capacity (resistive), max.	1500 VA	DC switching capacity (resistive), max.	144 W @ 24 V
Switch-on delay	≤ 9 ms	Switch-off delay	<25 ms
Contact type	1 CO contact (AgSnO)	Mechanical service life	5 x 106 switching cycles
Min. switching power	100 mA @ 12 V		

TRS 48VUC 1CO AGSNO

Weidmüller Interface GmbH & Co. KG
Klingenbergstraße 26
D-32758 Detmold
Germany

www.weidmueller.com

Technical data

General data

Operating altitude	≤ 2000 m, above sea level	
Mounting rail	TS 35	
Test button available	No	
Mechanical switch position indicator	No	
Colour	black	
UL94 flammability rating component	Component	Housing
	UL94 flammability rating	V-0
	Component	Retaining clip
	UL94 flammability rating	V-0

Insulation coordination

Rated voltage	300 V	Pollution severity	2
Surge voltage category	III	Clearance and creepage distances for control side - load side	≥ 6 mm
Dielectric strength for control side - load side	4 kVeff / 1 Min.	Type of isolation at input and output	reinforced insulation
Dielectric strength of open contact	1 kVeff / 1 min	Dielectric strength to mounting rail	4 kVeff / 1 Min.
Impulse withstand voltage	6 kV (1.2/50 µs)	Protection degree	IP20

Further details of approvals / standards

Certificate No. (DNV)	TAA00001E5	Certificate no. (cULus)	E141197

Connection data

Wire connection method	Screw connection	Stripping length, rated connection	8 mm
Tightening torque, max.	0.4 Nm	Clamping range, rated connection	1.5 mm²
Clamping range, min.	0.14 mm²	Clamping range, max.	2.5 mm²
Wire connection cross section AWG, min.	AWG 26	Wire connection cross section AWG, max.	AWG 14
Wire cross-section, solid, min.	0.14 mm²	Wire cross-section, solid, max.	2.5 mm²
Wire cross-section, solid, min. (AWG)	AWG 26	Wire cross-section, solid, max. (AWG)	AWG 14
Wire connection cross section, finely stranded, min.	0.14 mm²	Wire connection cross section, finely stranded, max.	2.5 mm²
Wire cross-section, finely stranded, min. (AWG)	AWG 26	Wire cross-section, finely stranded, max. (AWG)	AWG 16
Wire connection cross-section, finely stranded with wire-end ferrules DIN 46228/4, min.	0.25 mm²	Wire connection cross-section, finely stranded with wire-end ferrules DIN 46228/4, max.	2.5 mm²
Conductor cross-section, flexible, AEH (DIN 46228-1), min.	0.25 mm²	Conductor cross-section, flexible, AEH (DIN 46228-1), max.	1.5 mm²
Wire connection cross section, finely stranded, two clampable wires, min.	0.5 mm²	Wire cross-section, finely stranded, two clampable wires, max.	1 mm²
Blade size	size PH0		

Classifications

ETIM 8.0	EC001437	ETIM 9.0	EC001437
ETIM 10.0	EC001437	ECLASS 14.0	27-37-16-01
ECLASS 15.0	27-37-16-01		

TRS 48VUC 1CO AGSNO

Weidmüller Interface GmbH & Co. KG
Klingenbergstraße 26
D-32758 Detmold
Germany

www.weidmueller.com

Drawings

Wiring diagram

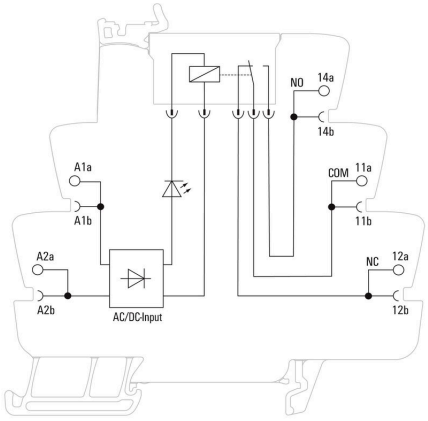

Graph

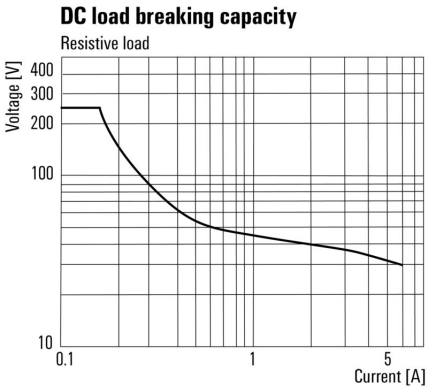

DC load limit curve Resistive load

Graph

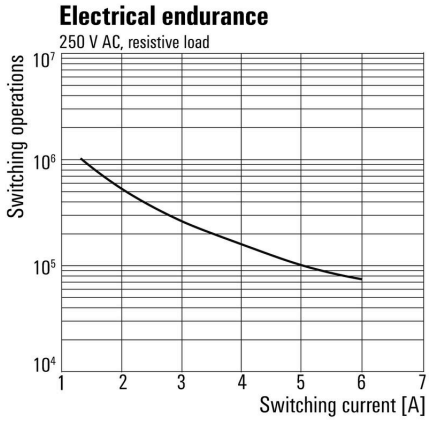

Electrical service life230 V AC
resistive load 230 V AC resistive load

Dimensional drawing

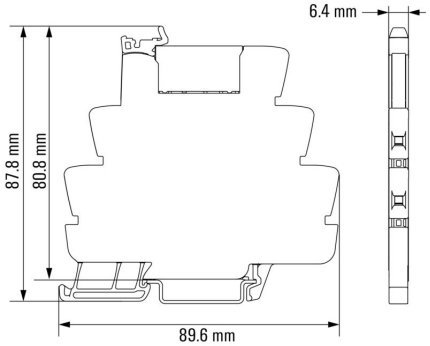

TRS 48VUC 1CO AGSNO

Weidmüller Interface GmbH & Co. KG
Klingenbergstraße 26
D-32758 Detmold
Germany

www.weidmueller.com

Drawings

Miscellaneous

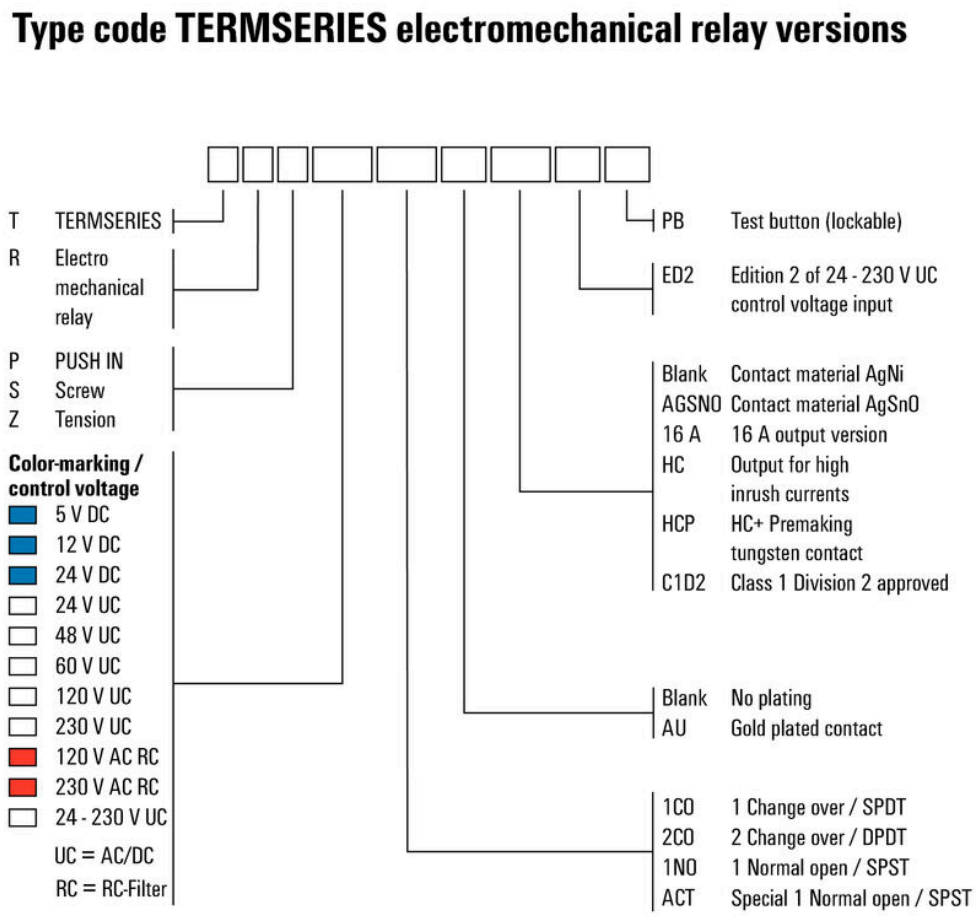

Type codes

TRS 48VUC 1CO AGSNO

Weidmüller Interface GmbH & Co. KG
Klingenbergstraße 26
D-32758 Detmold
Germany

www.weidmueller.com

Accessories

Partition plate

Versatile separation plates
Separation plates can be used to group together signals visually, to electrically
isolate modules and to insert markings for a better overview. This makes
them a particularly versatile accessory. Separation plates increase the
clearance and creepage distances between two modules, thus increasing
the rated insulation voltage between two modules to up to 600 V. Double
separation plates can be marked with WAD5 or WS10/5 markers and
enable continuous cross-connections. Installation is made easier with the
perforations to individually break out the cross-connection channels.

- Partition plates visually separates groups from each other
- Indentations for individual breaking out the crosscconnection channels
- Partition plates isolates between two modules by increasing the clearance and creepage distances of up to 600 V

General ordering data

Type	TW TXS/TXZ R3.2	Version
Order No.	1240800000	TERMSERIES, Partition plate
GTIN (EAN)	4050118028188	
Qty.	10 ST	

Supply module

Space-saving supply modules
Our supply terminals enable potentials to be fed at the input – e.g.
neutral or minus potentials – or switched potentials to be fed at the output. In
conjunction with precisely fitting cross-connections from the TEMRSERIES,
the connections for the cables on the relay module remain free for actuators
or sensors. No additional feed-through terminal blocks are required, resulting
in huge space savings in the panel. At the same time, the wiring is simplified
as no double wire-end ferrules are required for the potential feed.

General ordering data

Type	TXP SUPPLY	Version
Order No.	2618940000	TERMSERIES, Supply module, Number of contacts: 5, , Continuous
GTIN (EAN)	4050118667592	current: 10 A, PUSH IN
Qty.	10 ST	

Weidmüller Interface GmbH & Co. KG
Klingenbergstraße 26
D-32758 Detmold
Germany

www.weidmueller.com

Accessories

Type	TXS SUPPLY	Version
Order No.	1240780000	TERMSERIES, Supply module, Number of contacts: 5, , Continuous
GTIN (EAN)	4050118028140	current: 10 A, Screw connection
Qty.	10 ST	
Type	TXZ SUPPLY	Version
Order No.	1240790000	TERMSERIES, Supply module, Number of contacts: 5, , Continuous
GTIN (EAN)	4050118028164	current: 10 A, Tension-clamp connection
Qty.	10 ST	

Blank

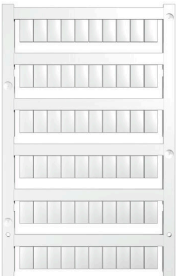

WS markers are the perfect match for the W-series connectors. Thanks to their system compatibility, the WS tags can also be used with the I-series and the Z-series. The large marking surfaces do not only permit long character strings but also multi-line text.
WS markers are ideal for labels with long, customised character strings. Thanks to the proven MultiCard format, printing with PrintJet CONNECT oder/or Plotter is possible.
• Can be fitted in strips or individually
• Markers in proven MultiCard format
For custom printing: Please send us a file of our labeling software M-Print PRO or M-Print PRO Online (without installation) for your labeling specifications.

General ordering data

Type	WS 10/6 M MC NE WS	Version
Order No.	1818400000	WS, Terminal marker, 10 x 6 mm, Pitch in mm (P): 6.00 Weidmueller,
GTIN (EAN)	4032248310876	Allen-Bradley, white
Qty.	600 ST	

Slotted screwdriver

Slotted screwdriver with rounded blade SD DIN 5265, ISO 2380/2, output to DIN 5264, ISO 2380/1. ChromTop tip, SoftFinish grip

General ordering data

Type	SDS 0.6X3.5X100	Version
Order No.	2749340000	Screwdriver, Blade width (B): 3.5 mm, Blade length: 100 mm, Blade
GTIN (EAN)	4050118895568	thickness (A): 0.6 mm
Qty.	1 ST	
Type	SDIS SLIM 0.6X3.5X100	Version
Order No.	2749610000	Mounting tool, Blade width (B): 3.5 mm, Blade length: 100 mm, Blade
GTIN (EAN)	4050118896350	thickness (A): 0.6 mm
Qty.	1 ST	

TRS 48VUC 1CO AGSNO

Weidmüller Interface GmbH & Co. KG
Klingenbergstraße 26
D-32758 Detmold
Germany

www.weidmueller.com

Accessories

Cross-connections

Adjustable cross-connections
Increase the flexibility of your cross-connections. The TERMSERIES CROSS-CONNECTION (TCC) enables individually adjustable cross-connections with up to 51 poles. The maximum number of pluggable poles has been increased to 32 poles. The strip material can be shortened to the required length very easily. The cross-connectors convince thanks to their easy handling and visibility as well as their universal connection possibilities. An additional web prevents the spring from deforming during assembly.

- Individually adjustable cross-connection with 51 poles
- Additional bar to avoid deformation of the spring
- Increased cross-connection – up to 32 poles possible
- Vibration resistance

General ordering data

Type	TCC 6.4/51 RD	Version
Order No.	2556410000	TERMSERIES, Cross-connector
GTIN (EAN)	4050118566925	
Qty.	10 ST	
Type	TCC 6.4/51 OR	Version
Order No.	2556370000	TERMSERIES, Cross-connector
GTIN (EAN)	4050118566680	
Qty.	10 ST	
Type	TCC 6.4/51 BL	Version
Order No.	2556450000	TERMSERIES, Cross-connector
GTIN (EAN)	4050118566963	
Qty.	10 ST	
Type	TCC 6.4/51 BK	Version
Order No.	2556490000	TERMSERIES, Cross-connector
GTIN (EAN)	4050118567007	
Qty.	10 ST	
Type	TCC 6.4/2 OR	Version
Order No.	2556350000	TERMSERIES, Cross-connector
GTIN (EAN)	4050118566826	
Qty.	10 ST	
Type	TCC 6.4/2 BL	Version
Order No.	2556430000	TERMSERIES, Cross-connector
GTIN (EAN)	4050118566949	
Qty.	10 ST	
Type	TCC 6.4/2 BK	Version
Order No.	2556470000	TERMSERIES, Cross-connector
GTIN (EAN)	4050118566987	
Qty.	10 ST	
Type	TCC 6.4/10 RD	Version
Order No.	2556400000	TERMSERIES, Cross-connector
GTIN (EAN)	4050118566918	
Qty.	10 ST	
Type	TCC 6.4/10 OR	Version
Order No.	2556360000	TERMSERIES, Cross-connector
GTIN (EAN)	4050118566673	
Qty.	10 ST	

TRS 48VUC 1CO AGSNO

Weidmüller Interface GmbH & Co. KG
Klingenbergstraße 26
D-32758 Detmold
Germany

www.weidmueller.com

Accessories

Type	TCC 6.4/10 BL	Version
Order No.	2556440000	TERMSERIES, Cross-connector
GTIN (EAN)	4050118566956	
Qty.	10 ST	
Type	TCC 6.4/10 BK	Version
Order No.	2556480000	TERMSERIES, Cross-connector
GTIN (EAN)	4050118566994	
Qty.	10 ST	
Type	TCC 12.8/26 RD	Version
Order No.	2556420000	TERMSERIES, Cross-connector
GTIN (EAN)	4050118566932	
Qty.	10 ST	
Type	TCC 12.8/26 OR	Version
Order No.	2556380000	TERMSERIES, Cross-connector
GTIN (EAN)	4050118566697	
Qty.	10 ST	
Type	TCC 12.8/26 BL	Version
Order No.	2556460000	TERMSERIES, Cross-connector
GTIN (EAN)	4050118566970	
Qty.	10 ST	
Type	TCC 12.8/26 BK	Version
Order No.	2556500000	TERMSERIES, Cross-connector
GTIN (EAN)	4050118567014	
Qty.	10 ST	
Type	TCC 6.4/2 RD	Version
Order No.	2556390000	TERMSERIES, Cross-connector
GTIN (EAN)	4050118566901	
Qty.	10 ST	

WS 12/6

WS/ DEK
MultiMark terminal markers use an innovative composite material made from two components. The hard base contour of the marker snaps securely into the connector. The elastic surface finish makes the marker easy to mount. This specially punched material enables the strips to be stretched to accommodate the slight variations in spacing that tend to add up, especially with long terminal blocks. Another advantage: the excellent printability of the surface material guarantees durable and wear-resistant labelling. A print resolution of 300 dpi also produces a very legible script.
Your benefits with MultiMark
- Firm hold and durable printing
- Continuous strips save installation time
- Easy mounting thanks to an innovative composite material
- Large label field for optimal legibility
- High flexibility thanks to manufacturer independence

TRS 48VUC 1CO AGSNO

Weidmüller Interface GmbH & Co. KG
Klingenbergstraße 26
D-32758 Detmold
Germany

www.weidmueller.com

Accessories

General ordering data

Type	WS 12/6 MM WS	Version
Order No.	2007200000	WS, Terminal marker, 12 x 6 mm, Weidmueller, white
GTIN (EAN)	4050118391886	
Qty.	600 ST	