Data sheet

AMG ELM-6D CO

Weidmüller Interface GmbH & Co. KG
Klingenbergstraße 26
D-32758 Detmold
Germany

www.weidmueller.com

Similar to illustration

Efficient machine and facility operation calls for fail-safe and maintenance-friendly control voltage distribution that can be installed in a time and space-saving manner.
With the new maxGUARD system, the terminal blocks (previously installed separately) for distributing potential to the outputs of the electronic load monitors become an integral part of a 24 V DC control voltage distribution system.
The innovative combination of load monitoring and potential distribution saves time during installation, increases safety against failure and reduces the amount of space required on the terminal rail by 50%.

General ordering data

Version	Electronic load monitoring, 6 A, 24 V DC
Order No.	2082440000
Type	AMG ELM-6D CO
GTIN (EAN)	4050118419368
Qty.	1 items

AMG ELM-6D CO

Weidmüller Interface GmbH & Co. KG
Klingenbergstraße 26
D-32758 Detmold
Germany

www.weidmueller.com

Technical data

Approvals

Approvals	
ROHS	Conform
UL File Number Search	UL Website
Certificate no. (cULus)	E258476

Dimensions and weights

Depth	96.5 mm	Depth (inches)	3.7992 inch
Height	125 mm	Height (inches)	4.9212 inch
Width	18.3 mm	Width (inches)	0.7205 inch
Net weight	43 g		

Temperatures

Storage temperature	-40 °C...85 °C	Operating temperature	-25 °C...70 °C

Environmental Product Compliance

RoHS Compliance Status	Compliant with exemption
RoHS Exemption (if applicable/known)	7a, 7cI
REACH SVHC	Lead 7439-92-1
SCIP	a7fff16c-85aa-4fb0-a206-7be03f41b0b7

Input

Rated input voltage	24 V DC	Surge protection	Suppressor diode
Input fuse (internal)	Yes	DC input voltage range	18...30 V DC
Current consumption (idle)	40 mA	Current consumption (full load)	IOUT +50 mA
max. admissible residual ripple at the input	100 mVpp		

Output

Connection system	PUSH IN	Surge protection	Suppressor diode
Switch-on delay	1 s	Capacitive load	15,000 µF
Adjustable rated current	Yes	Rated current	6 A
Triggering characteristic	see characteristic curve		

General data

Protection degree	IP20	
Surge voltage category	III	
MTTF	According to Standard	SN 29500
	Operating time (hours), min.	2282000 h
	Ambient temperature	40 °C
	Input voltage	24 V
	Output power	144 W
	Duty cycle	100 %

Weidmüller Interface GmbH & Co. KG
Klingenbergstraße 26
D-32758 Detmold
Germany

www.weidmueller.com

Technical data

Conformal coating	Yes
Function key	Activation time <3s, Reset, ON
Power loss, idling	720 mW
Power loss, nominal load	1566 mW
Relay to activate the output	Yes

Insulation coordination

Surge voltage category	III

Connection data (output)

Connection system	PUSH IN	Number of terminals	6 (3x + / 3x -)
Conductor cross-section, AWG/kcmil , max.	12 AWG	Conductor cross-section, AWG/kcmil , min.	26 AWG
Conductor cross-section, flexible , max.	2.5 mm²	Conductor cross-section, flexible , min.	0.14 mm²
Conductor cross-section, rigid , max.	2.5 mm²	Conductor cross-section, rigid , min.	0.14 mm²
Screwdriver blade	0.6 x 3.5		

Signalling

Transistor output, positive-switching	Pre-warning, Alarm	LED green	Operation (failure-free), Early warning: I Out > 90% I Rated (flashing)
Red LED	Load monitoring has disconnected, Load monitoring has triggered (flashing), Internal error (rapid flashing)		

Classifications

ETIM 8.0	EC003538	ETIM 9.0	EC003538
ETIM 10.0	EC003538	ECLASS 14.0	27-37-10-16
ECLASS 15.0	27-37-10-16		

AMG ELM-6D CO

Weidmüller Interface GmbH & Co. KG
Klingenbergstraße 26
D-32758 Detmold
Germany

www.weidmueller.com

Drawings

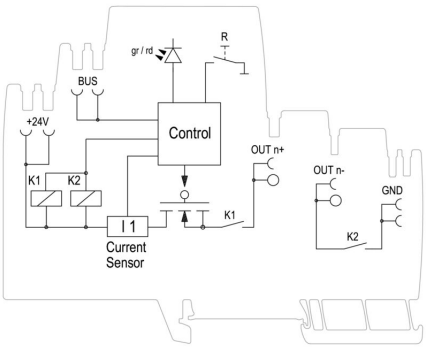

Schematic circuit diagram

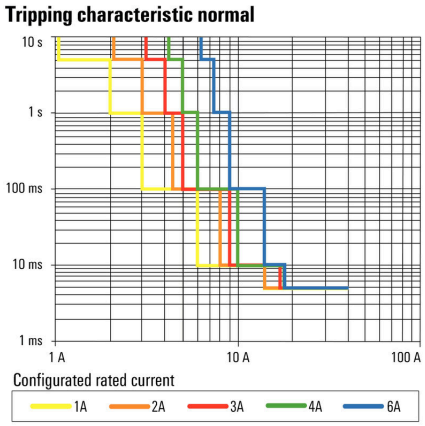

Tripping characteristic

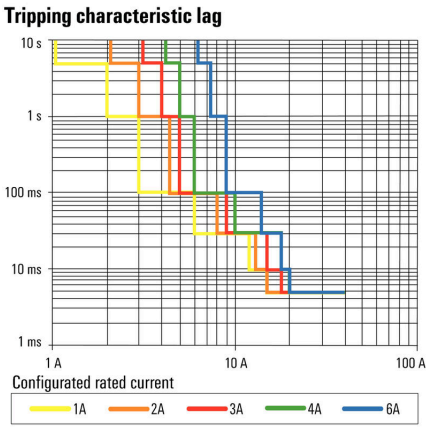

Slow tripping characteristic