Data sheet

BVFL 7.62HP/04/180MF4 BCF/04 SN BK BX SO

Weidmüller Interface GmbH & Co. KG
Klingenbergstraße 26
D-32758 Detmold
Germany

www.weidmueller.com

Product image

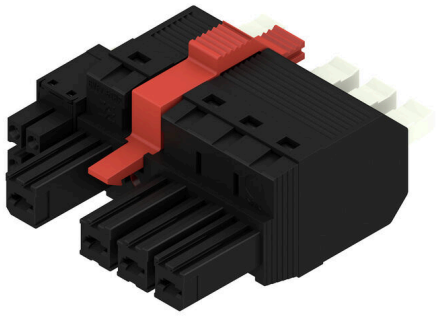



Similar to illustration

180° female plug with energy and signal contacts in PUSH IN wire connection in 7.62 pitch.
Fulfils the IEC 61800-5-1 requirement and for the energy contact UL 1059 ClassC 600 V.The self-locking middle flange with automatic interlock reduces the space requirements by one pitch width in comparison with conventional solutions. Optionally also available with additional mounting screw.Including pre-assembled pluggable shield connection for large area shielding in your application.
Directly during the plug-in process itself, the shield connection is attached vibration-proof to the contact area of the metal housing.

General ordering data

Version	PCB plug-in connector, female plug, 7.62 mm, Number of poles: 4, 180°, PUSH IN with actuator, Box
Order No.	2016150000
Type	BVFL 7.62HP/04/180MF4 BCF/04 SN BK BX SO
GTIN (EAN)	4050118400434
Qty.	20 items
Product data	IEC: 800 V / 0.5 - 6 mm² UL: / AWG 24 - AWG 8
Packaging	Box

BVFL 7.62HP/04/180MF4 BCF/04 SN BK BX SO

Weidmüller Interface GmbH & Co. KG
Klingenbergstraße 26
D-32758 Detmold
Germany

www.weidmueller.com

Technical data

Approvals

Approvals	
UL File Number Search	UL Website
Certificate No. (cURus)	E60693

Dimensions and weights

Net weight	42.58 g

Environmental Product Compliance

RoHS Compliance Status	Compliant without exemption
REACH SVHC	No SVHC above 0.1 wt%

System Parameters

Product family	OMNIMATE Power - series BV/SV 7.62HP	Type of connection	Field connection
Wire connection method	PUSH IN with actuator	Pitch in mm (P)	7.62 mm
Pitch in inches (P)	0.300 "	Conductor outlet direction	180°
Number of poles	4	L1 in mm	30.48 mm
L1 in inches	1.200 "	L2 in mm	3.81 mm
L2 in inch	0.150 "	Pin series quantity	1
Rated cross-section	6 mm²	Stripping length	12 mm
Screwdriver blade	0.6 x 3.5	Plugging cycles	25

Material data

Insulating material	PA GF	Colour	black
Colour of operational elements	white	Colour chart (similar)	RAL 9011
Moisture Level (MSL)		UL 94 flammability rating	V-0
Contact material	Cu-alloy	Contact surface	tinned
Layer structure of plug contact	6...8 µm Sn glossy	Storage temperature, min.	-40 °C
Storage temperature, max.	70 °C	Operating temperature, min.	-50 °C
Operating temperature, max.	125 °C	Temperature range, installation, min.	-25 °C
Temperature range, installation, max.	125 °C		

Conductors suitable for connection

Solid, min. H05(07) V-U	0.5 mm²			
Solid, max. H05(07) V-U	6 mm²			
Flexible, min. H05(07) V-K	0.5 mm²			
Flexible, max. H05(07) V-K	6 mm²			
w. wire end ferrule, DIN 46228 pt 1, min.	0.5 mm²			
w. wire end ferrule, DIN 46228 pt 1, max.	6 mm²			
Clampable conductor	Cross-section for conductor connection	Type	fine-wired	
		nominal	0.5 mm²	
	wire end ferrule	Stripping length	nominal	14 mm
		Recommended wire-end ferrule	H0,5/18 OR	
	Cross-section for conductor connection	Type	fine-wired	
		nominal	1 mm²	

BVFL 7.62HP/04/180MF4 BCF/04 SN BK BX SO

Weidmüller Interface GmbH & Co. KG
Klingenbergstraße 26
D-32758 Detmold
Germany

www.weidmueller.com

Technical data

wire end ferrule	Stripping length	nominal	15 mm
	Recommended wire-end ferrule	H1,0/18 GE	
Cross-section for conductor connection	Type	fine-wired	
	nominal	1.5 mm²	
wire end ferrule	Stripping length	nominal	15 mm
	Recommended wire-end ferrule	H1,5/18D SW	
	Stripping length	nominal	12 mm
	Recommended wire-end ferrule	H1,5/12	
Cross-section for conductor connection	Type	fine-wired	
	nominal	0.75 mm²	
wire end ferrule	Stripping length	nominal	14 mm
	Recommended wire-end ferrule	H0,75/18 W	
Cross-section for conductor connection	Type	fine-wired	
	nominal	2.5 mm²	
wire end ferrule	Stripping length	nominal	14 mm
	Recommended wire-end ferrule	H2,5/19D BL	
	Stripping length	nominal	12 mm
	Recommended wire-end ferrule	H2,5/12	
Cross-section for conductor connection	Type	fine-wired	
	nominal	4 mm²	
wire end ferrule	Stripping length	nominal	12 mm
	Recommended wire-end ferrule	H4,0/12	
	Stripping length	nominal	14 mm
	Recommended wire-end ferrule	H4,0/20D GR	
Cross-section for conductor connection	Type	fine-wired	
	nominal	6 mm²	
wire end ferrule	Stripping length	nominal	14 mm
	Recommended wire-end ferrule	H6,0/20 SW	
	Stripping length	nominal	12 mm
	Recommended wire-end ferrule	H6,0/12	
Reference text	The outside diameter of the plastic collar should not be larger than the pitch (P), Length of ferrules is to be chosen depending on the product and the rated voltage.		

Rated data acc. to IEC

Rated current, max. number of poles (Tu=20°C)	38 A	Rated current, min. number of poles (Tu=40°C)	34 A
Rated voltage for surge voltage class / pollution degree II/2	800 V	Rated voltage for surge voltage class / pollution degree III/2	630 V
Rated voltage for surge voltage class / pollution degree III/3	630 V	Rated impulse voltage for surge voltage class/ pollution degree II/2	6 kV
Rated impulse voltage for surge voltage class/ pollution degree III/2	6 kV	Rated impulse voltage for surge voltage class/ contamination degree III/3	6 kV
Creepage distance, min.	12.7 mm	Clearance, min.	10.4 mm

Rated data acc. to UL 1059

Institute (cURus)	CURUS	Certificate No. (cURus)	E60693
Rated voltage (Use group F / UL 1059)	600 V	Rated current (Use group F / UL 1059)	33 A

BVFL 7.62HP/04/180MF4 BCF/04 SN BK BX SO

Weidmüller Interface GmbH & Co. KG
Klingenbergstraße 26
D-32758 Detmold
Germany

www.weidmueller.com

Technical data

Wire cross-section, AWG, min.	AWG 24	Wire cross-section, AWG, max.	AWG 8
Reference to approval values	Specifications are maximum values, details - see approval certificate.		

Packing

Packaging	Box	VPE length	352.00 mm
VPE width	141.00 mm	VPE height	63.00 mm

Technical data - hybrid

Pitch in mm (Signal)	3.81 mm	Pitch in inches (Signal)	0.15 inch
Number of poles (Signal)	4	L2 in mm	3.81 mm
L2 in inch	0.150 "	Number of rows (Signal)	2
Contact material (Signal)	CuMg	Contact surface (Signal)	tinned
Layer structure of the plug contact (Signal)	1-3 µ Ni / 4-8 µ Sn	Rated voltage for overvoltage class/ pollution severity level II/2 (Signal)	250 V
Rated voltage for overvoltage class/ pollution severity level III/2 (Signal)	150 V	Rated voltage for overvoltage class/ pollution severity level III/3 (Signal)	63 V
Rated impulse voltage for overvoltage class/pollution severity level II/2 (Signal)	2.5 kV	Rated impulse voltage for overvoltage class/pollution severity level III/2 (Signal)	2.5 kV
Rated impulse voltage for overvoltage class/pollution severity level III/3 (Signal)	2.5 kV	Short-time withstand current resistance (Signal)	3 x 1s with 80 A
Connector cross-section (Signal)	AWG 26...AWG 16		

Conductors that can be connected - Hybrid

Clamping range, rated connection (Power)	0.5...10 mm²	Clamping range, rated connection (Signal)	0.2...1.5 mm²
Connector cross-section (Power)	AWG 24...AWG 8	Connector cross-section AWG (Signal)	AWG 26...AWG 16
solid, H05(07) V-U (Power)	0.5...10 mm²	solid, H05(07) V-U (Signal)	0.14...1.5 mm²
flexible, H05(07) V-K (Power)	0.5...6 mm²	flexible, H05(07) V-K (Signal)	0.14...1.5 mm²
with wire-end ferrule with collar (Power)	0.5...6 mm²	with wire-end ferrule with collar, DIN 46 228/4 (Signal)	0.25...1.5 mm²
with wire-end ferrule according to DIN 46 228/1 (Power)	0.5...6 mm²	with wire-end ferrule according to DIN 46 228/1 (Signal)	0.25...1.5 mm²

Important note

IPC conformity	Conformity: The products are developed, manufactured and delivered according international recognized standards and norms and comply with the assured properties in the data sheet resp. fulfill decorative properties in accordance with IPC-A-610 "Class 2". Further claims on the products can be evaluated on request.
Notes	• Technical specifications refer to the power contacts • Technical data of signal contacts: 50V / 5A, stripping length 8mm • Additional variants on request • Rated current related to rated cross-section & min. No. of poles. • Wire end ferrule with plastic collar to DIN 46228/4 • Wire end ferrule without plastic collar to DIN 46228/1 • Rated data refer only to the component itself. Clearance and creepage distances to other components are to be designed in accordance with the relevant application standards. • Additional pole combinations on request • In accordance with IEC 61984, OMNIMATE-connectors are connectors without breaking capacity (COC). During designated use, connectors are not allowed to be engaged or disengaged when live or under load • Long term storage of the product with average temperature of 50 °C and maximum humidity 70%, 36 months

BVFL 7.62HP/04/180MF4 BCF/04 SN BK BX SO

Weidmüller Interface GmbH & Co. KG
Klingenbergstraße 26
D-32758 Detmold
Germany

www.weidmueller.com

Technical data

Classifications

ETIM 8.0	EC002638	ETIM 9.0	EC002638
ETIM 10.0	EC002638	ECLASS 14.0	27-46-03-02
ECLASS 15.0	27-46-03-02		

BVFL 7.62HP/04/180MF4 BCF/04 SN BK BX SO

Weidmüller Interface GmbH & Co. KG
Klingenbergstraße 26
D-32758 Detmold
Germany

www.weidmueller.com

Drawings

Product image

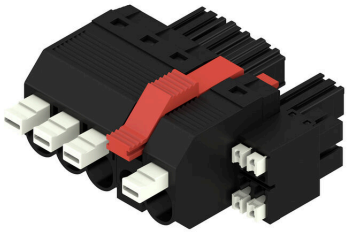

Dimensional drawing

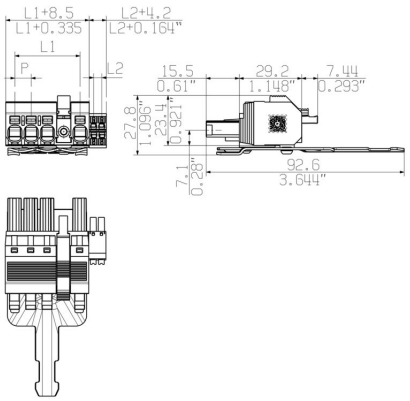

Similar to illustration

Graph

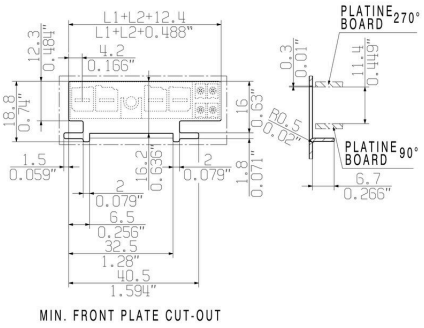

MIN. FRONT PLATE CUT-OUT

Graph

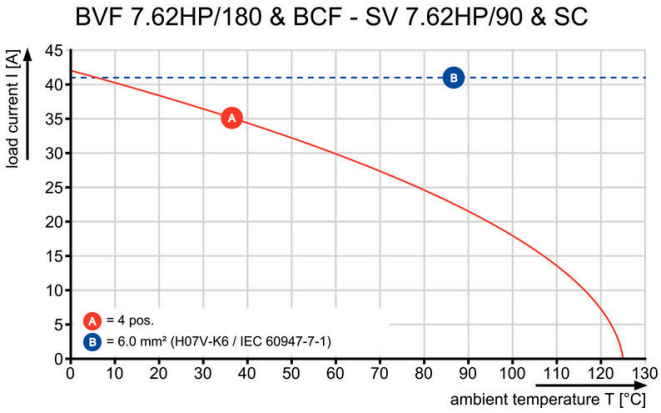

Product benefits

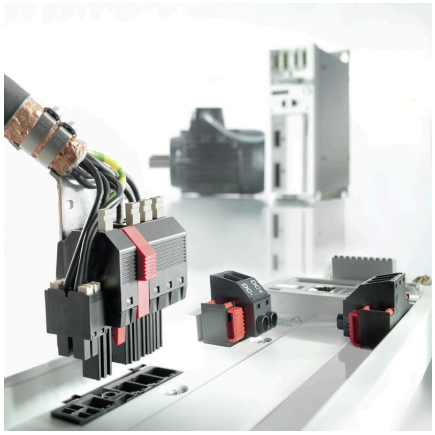

one connector for: Power, Signal (data) and Shielding

Product benefits

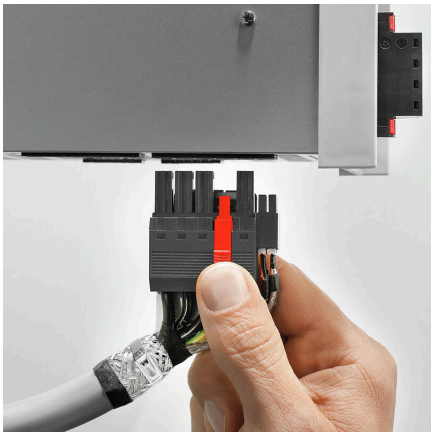

Single-handed operationAutomatic latching

BVFL 7.62HP/04/180MF4 BCF/04 SN BK BX SO

Weidmüller Interface GmbH & Co. KG
Klingenbergstraße 26
D-32758 Detmold
Germany

www.weidmueller.com

Accessories

Coding elements



The pluggable connections for power electronics - optimised for modern drive technologies, e.g. motor starters, frequency converters and servo-controllers. OMNIMATE Power sets the new standard – with increased safety and innovative solutions such as the pluggable shield, integrated signal contacts and one-handed operation.
The three product lines offer you further advantages:
- Application-oriented scalability: from the compact 4 mm² connector for 29 A (IEC) or 20 A (UL) up to the sturdy 16 mm² connector for 76 A (IEC) or 54 A (UL)
- Unlimited usage up to 1,000 V (IEC) or 600 V (UL)
- A variety of application optimised mounting options

Our service:
Design your individual connectors simply by using the product configurator.

General ordering data

Type	BV/SV 7.62HP KO	Version
Order No.	1937590000	PCB plug-in connector, Accessories, Coding element, black, Number
GTIN (EAN)	4032248608881	of poles: 1
Qty.	50 ST	

Shielding

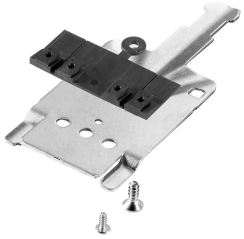

The pluggable connections for power electronics - optimised for modern drive technologies, e.g. motor starters, frequency converters and servo-controllers. OMNIMATE Power sets the new standard – with increased safety and innovative solutions such as the pluggable shield, integrated signal contacts and one-handed operation.
The three product lines offer you further advantages:
- Application-oriented scalability: from the compact 4 mm² connector for 29 A (IEC) or 20 A (UL) up to the sturdy 16 mm² connector for 76 A (IEC) or 54 A (UL)
- Unlimited usage up to 1,000 V (IEC) or 600 V (UL)
- A variety of application optimised mounting options

Our service:
Design your individual connectors simply by using the product configurator.

General ordering data

Type	BVF 7.62HP SH150 4-6 KIT	Version
Order No.	1118480000	PCB plug-in connector, Accessories, For a shield connection, black,
GTIN (EAN)	4032248899449	Number of poles: 0
Qty.	25 ST	

Type	BVF 7.62HP SH180 4-6 KIT	Version
Order No.	1118470000	PCB plug-in connector, Accessories, For a shield connection, black,
GTIN (EAN)	4032248899456	Number of poles: 0
Qty.	25 ST	

BVFL 7.62HP/04/180MF4 BCF/04 SN BK BX SO

Weidmüller Interface GmbH & Co. KG
Klingenbergstraße 26
D-32758 Detmold
Germany

www.weidmueller.com

Accessories

Type	BVF 7.62HP SH210 4-6 KIT	Version
Order No.	1118490000	PCB plug-in connector, Accessories, For a shield connection, black,
GTIN (EAN)	4032248899302	Number of poles: 0
Qty.	25 ST	

Crimping tools



Crimping tools for wire end ferrules, with and without plastic collars
- Ratchet guarantees precise crimping
- Release option in the event of incorrect operation

General ordering data

Type	PZ 6/5	Version
Order No.	9011460000	Pressing tool, Crimping tool for wire-end ferrules, 0.25mm², 6mm²,
GTIN (EAN)	4008190165352	Trapezoidal indentation crimp
Qty.	1 ST	

Slotted screwdriver



Slotted screwdriver with rounded blade SD DIN 5265, ISO 2380/2, output to DIN 5264, ISO 2380/1. ChromTop tip, SoftFinish grip

General ordering data

Type	SDS 0.6X3.5X100	Version
Order No.	9008330000	Screwdriver, Screwdriver
GTIN (EAN)	4032248056286	
Qty.	1 ST	

BVFL 7.62HP/04/180MF4 BCF/04 SN BK BX SO

Weidmüller Interface GmbH & Co. KG
Klingenbergstraße 26
D-32758 Detmold
Germany

www.weidmueller.com

Counterpart

SV 7.62HP / SC 3.81 90MF

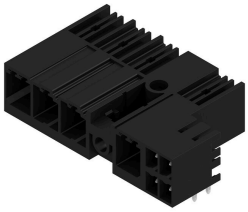

Combined 90° male header with power and signal contacts in PUSH IN connection technology incl. self-locking middle flange interlock and (optional) pluggable shield connection with a 7.62 pitch.
Enables simultaneous connection of power, signals and (optional) EMC shielding. Ideal for connecting servo and asynchronous drives.
Meets the requirements of IEC 61800-5-1 and enables UL approval as per UL840 600 V when combined with female header BVF 7.62HP/...BCF..R...
Without a female header, the mating profile guarantees minimum power-contact touch-safety of >3 mm with 20 N pressure on the test finger.
The self-locking middle flange reduces the space requirements by one pitch width in comparison with conventional solutions.
Optionally on request: without flange fastening, with additional screw mount or with soldered flange fastening.

General ordering data

Type	SV 7.62HP/04/90MF4 SC/0...	Version
Order No.	1090130000	PCB plug-in connector, male header, closed side, Middle flange, THT
GTIN (EAN)	4032248858682	solder connection, 7.62 mm, Number of poles: 4, 90°, Solder pin
Qty.	36 ST	length (l): 3.5 mm, tinned, black, Box

SV 7.62HP / SC 3.81 270MF

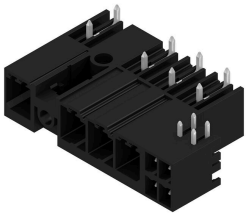

Combined 270° male header with power and signal contacts incl. self-locking middle flange interlock with a 7.62 pitch.
Enables simultaneous connection of power, signals and (optional) EMC shielding. Ideal for connecting servo and asynchronous drives.
Meets the requirements of IEC 61800-5-1 and enables UL approval as per UL840 600 V when combined with female header BVF 7.62HP/...BCF..R...
Without a female header, the mating profile guarantees minimum power-contact touch-safety of >3 mm with 20 N pressure on the test finger.
The self-locking middle flange reduces the space requirements by one pitch width in comparison with conventional solutions.
Optionally on request: without flange fastening, with additional screw mount or with soldered flange fastening.

General ordering data

Type	SV 7.62HP/04/270MF4 SC/...	Version
Order No.	1089820000	PCB plug-in connector, male header, closed side, Middle flange, THT
GTIN (EAN)	4032248861095	solder connection, 7.62 mm, Number of poles: 4, 270°, Solder pin
Qty.	36 ST	length (l): 3.5 mm, tinned, black, Box

BVFL 7.62HP/04/180MF4 BCF/04 SN BK BX SO

Weidmüller Interface GmbH & Co. KG
Klingenbergstraße 26
D-32758 Detmold
Germany

www.weidmueller.com

Counterpart

SV-SMT 7.62HP / SC 3.81 90 MF

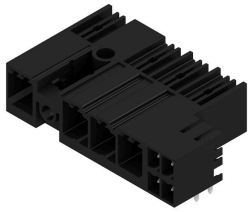

OMNIMATE Power BV / SV 7.62HP Hybrid – for power, signals and EMC
Three functions in one!
The OMNIMATE Power Hybrid connector provides developers and users with the perfect three-in-one solution.
This hybrid motor connector simultaneously unites power, signals and pluggable EMC shield support. Thus you save space on the PCB, on the outer side of the housing, and in the electrical cabinet. The self-snapping one-handed interlock mechanism requires only one plugging step and thus speeds up installation and maintenance procedures. It is easy to handle and interlocks automatically – even in difficult installation positions. The unique shielding shape and slender 30° wire entry enable a space savings of up to 10 cm between rows.

General ordering data

Type	SV-SMT 7.62HP/04/90MF4 ...	Version
Order No.	2529800000	PCB plug-in connector, male header, closed side, Middle flange, THT/
GTIN (EAN)	4050118540000	THR solder connection, 7.62 mm, Number of poles: 4, 90°, Solder pin
Qty.	36 ST	length (l): 2.6 mm, tinned, black, Box

SV-SMT 7.62HP / SC 3.81 270 MF

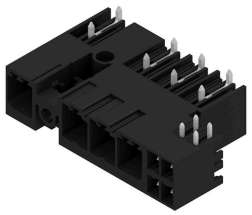

OMNIMATE Power BV / SV 7.62HP Hybrid – for power, signals and EMC
Three functions in one!
The OMNIMATE Power Hybrid connector provides developers and users with the perfect three-in-one solution.
This hybrid motor connector simultaneously unites power, signals and pluggable EMC shield support. Thus you save space on the PCB, on the outer side of the housing, and in the electrical cabinet. The self-snapping one-handed interlock mechanism requires only one plugging step and thus speeds up installation and maintenance procedures. It is easy to handle and interlocks automatically – even in difficult installation positions. The unique shielding shape and slender 30° wire entry enable a space savings of up to 10 cm between rows.

General ordering data

Type	SV-SMT 7.62HP/04/270MF4...	Version
Order No.	2529450000	PCB plug-in connector, male header, closed side, Middle flange, THT/
GTIN (EAN)	4050118539721	THR solder connection, 7.62 mm, Number of poles: 4, 270°, Solder
Qty.	36 ST	pin length (l): 2.6 mm, tinned, black, Box