Data sheet

HDC CFM 16 5F

Weidmüller Interface GmbH & Co. KG
Klingenbergstraße 26
D-32758 Detmold
Germany

www.weidmueller.com

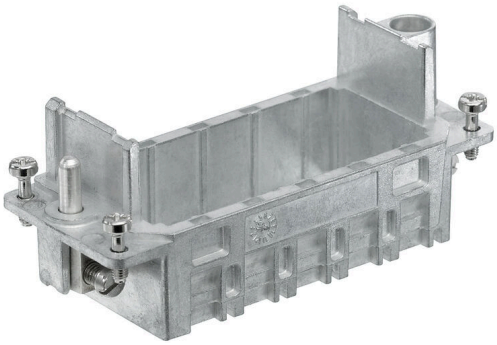

The sturdy CR16 module frames are available in polycarbonate or die-cast zinc.
The frames are designed so that 5 individual modules or corresponding double modules can be installed. The CR16 frames are designed to fit the size-6 housings.

General ordering data

Version	Heavy-duty connectors, HDC insert, ConCept frame
Order No.	1983880000
Type	HDC CFM 16 5F
GTIN (EAN)	4032248689019
Qty.	1 items

HDC CFM 16 5F

Weidmüller Interface GmbH & Co. KG
Klingenbergstraße 26
D-32758 Detmold
Germany

www.weidmueller.com

Technical data

Approvals

Approvals	
ROHS	Conform
UL File Number Search	UL Website
Certificate No. (cURus)	E92202

Dimensions and weights

Depth	84.5 mm	Depth (inches)	3.3268 inch
Height	35 mm	Height (inches)	1.378 inch
Width	34 mm	Width (inches)	1.3386 inch
Net weight	90.5 g		

Temperatures

Limit temperature	-40 °C ... 125 °C

Environmental Product Compliance

RoHS Compliance Status	Compliant without exemption
REACH SVHC	No SVHC above 0.1 wt%

ConCept Pneumatic module

Colour	Silver grey

Dimensions

Width	34 mm	Total length base	84.5 mm
Height of socket	35 mm		

General data

Tightening torque	0.5 Nm	Installation size	6
Colour	Silver grey	Tightening torque, max. PE connection	1.5 Nm
Type	Female	Tightening torque, min. PE connection	0.5 Nm
Basic material	Diecast zinc	Series	ConCept frame
Free from halogens	false	Low smoke acc. DIN EN 45545-2	Yes
BG	6		

Connection data PE

Connection type PE	Screw connection	Tightening torque, max. PE connection	1.5 Nm
Tightening torque, min. PE connection	0.5 Nm		

Version

Installation size	6	Basic material	Diecast zinc
BG	6		

HDC CFM 16 5F

Weidmüller Interface GmbH & Co. KG
Klingenbergstraße 26
D-32758 Detmold
Germany

www.weidmueller.com

Technical data

Classifications

ETIM 8.0	EC000437	ETIM 9.0	EC000437
ETIM 10.0	EC000437	ECLASS 14.0	27-44-02-02
ECLASS 15.0	27-44-02-02		

Weidmüller Interface GmbH & Co. KG
Klingenbergstraße 26
D-32758 Detmold
Germany

www.weidmueller.com

Accessories

Modul removal tool

Weidmüller offers a variety of crimping tools, no-contact tools, and fibre optic tools.

General ordering data

Type	HDC-DW-M0D	Version
Order No.	1688200000	Tool miscellaneous, Contact Removal Tool
GTIN (EAN)	4008190857189	
Qty.	1 ST	

Slotted screwdriver

VDE insulated slot-head screwdriver, SDI DIN 7437, ISO 2380/2, drive output acc. to DIN 5264, ISO 2380/1. SoftFinish grip

General ordering data

Type	SDIS 0.6X3.5X100	Version
Order No.	9008390000	Screwdriver, Screwdriver
GTIN (EAN)	4032248056354	
Qty.	1 ST	
Type	SDS 0.6X3.5X100	Version
Order No.	9008330000	Screwdriver, Screwdriver
GTIN (EAN)	4032248056286	
Qty.	1 ST	