Data sheet

# SL 7.62HP/03/90G 3.2SN OR BX

**Weidmüller Interface GmbH & Co. KG**
Klingenbergstraße 26
D-32758 Detmold
Germany

www.weidmueller.com

## Product image

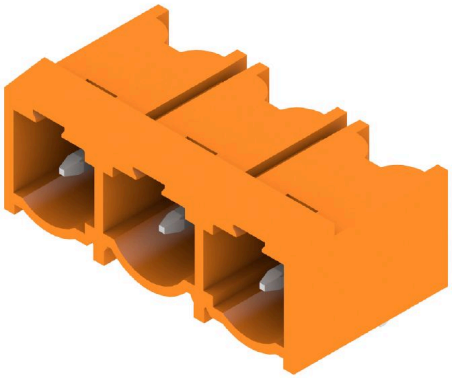

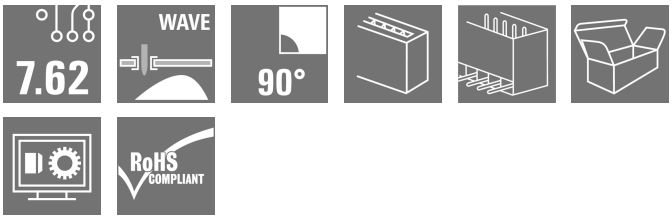


Power on board - 100% safety, 100% integration, 100% cost-effectiveness:
The compact, efficient solution for UL-600V applications in the lower performance range up to 12 kVA
- 29 A at 400 V (IEC)
- 20 A at 300 V (UL)
- Single compartment mating profile
- Clamping range: 0.08 - 4 mm² / AWG 28 - 12

Assisting in device approval:
- Meets the requirements for 600 V according to UL 508 / UL840.
- Meets the increased requirements on touch safety as per IEC68100-5-1

The slimming diet for multiple-stage device series:
Reduce the size and cut costs in the high-volume lower performance range without compromising device approval!
Male header, 90° outlet angle

### General ordering data

| | |
|---|---|
| Version | PCB plug-in connector, male header, closed side, THT solder connection, 7.62 mm, Number of poles: 3, 90°, Solder pin length (l): 3.2 mm, tinned, orange, Box |
| Order No. | 1980380000 |
| Type | SL 7.62HP/03/90G 3.2SN OR BX |
| GTIN (EAN) | 4032248707409 |
| Qty. | 100 items |
| Product data | IEC: 630 V / 29 A<br>UL: 300 V / 20 A |
| Packaging | Box |

# SL 7.62HP/03/90G 3.2SN OR BX

**Weidmüller Interface GmbH & Co. KG**
Klingenbergstraße 26
D-32758 Detmold
Germany

www.weidmueller.com

## Technical data

### Approvals

| | |
|---|---|
| Approvals | cULus |
| ROHS | Conform |
| UL File Number Search | UL Website |
| Certificate No. (cURus) | E60693 |

### Dimensions and weights

| | | | |
|---|---|---|---|
| Depth | 11.8 mm | Depth (inches) | 0.4646 inch |
| Height | 11.6 mm | Height (inches) | 0.4567 inch |
| Height of lowest version | 8.4 mm | Width | 22.04 mm |
| Width (inches) | 0.8677 inch | Net weight | 1.43 g |

### Temperatures

| | | | |
|---|---|---|---|
| Continuous operating temp., min. | -25 °C | Continuous operating temp., max. | 100 °C |

### Environmental Product Compliance

| | | |
|---|---|---|
| RoHS Compliance Status | Compliant without exemption | |
| REACH SVHC | No SVHC above 0.1 wt% | |
| Product Carbon Footprint | Cradle to gate | 0,014 kg CO2 eq. |

### System specifications

| | | | |
|---|---|---|---|
| Product family | OMNIMATE Power - series BL/SL 7.62HP | Type of connection | Board connection |
| Mounting onto the PCB | THT solder connection | Pitch in mm (P) | 7.62 mm |
| Pitch in inches (P) | 0.300 " | Outgoing elbow | 90° |
| Number of poles | 3 | Number of solder pins per pole | 1 |
| Solder pin length (l) | 3.2 mm | Solder pin dimensions | 1.0 x 1.0 mm |
| Solder pin dimensions = d tolerance | +0,01 / -0,03 mm | Solder eyelet hole diameter (D) | 1.4 mm |
| Solder eyelet hole diameter tolerance (D) | + 0,1 mm | L1 in mm | 15.24 mm |
| L1 in inches | 0.600 " | Number of rows | 1 |
| Pin series quantity | 1 | Touch-safe protection acc. to DIN VDE 57 106 | Safe from finger touch, plugged |
| Touch-safe protection acc. to DIN VDE 0470 | IP20 plugged | Protection degree | IP10 |
| Can be coded | Yes | Plugging cycles | 25 |

### Material data

| | | | |
|---|---|---|---|
| Insulating material | PBT | Colour | orange |
| Colour chart (similar) | RAL 2000 | Insulating material group | IIIa |
| Comparative Tracking Index (CTI) | ≥ 200 | Moisture Level (MSL) | |
| UL 94 flammability rating | V-0 | Contact material | Cu-alloy |
| Contact surface | tinned | Layer structure of solder connection | 1...3 µm Ni / 2...4 µm Sn matt |
| Layer structure of plug contact | 1...3 µm Ni / 2...4 µm Sn matt | Storage temperature, min. | -40 °C |
| Storage temperature, max. | 70 °C | Operating temperature, min. | -50 °C |
| Operating temperature, max. | 100 °C | Temperature range, installation, min. | -25 °C |
| Temperature range, installation, max. | 100 °C | | |

# SL 7.62HP/03/90G 3.2SN OR BX

**Weidmüller Interface GmbH & Co. KG**
Klingenbergstraße 26
D-32758 Detmold
Germany

www.weidmueller.com

## Technical data

### Rated data acc. to IEC

| | | | |
|---|---|---|---|
| tested acc. to standard | IEC 60664-1, IEC 61984 | Rated current, min. number of poles (Tu=20°C) | 29 A |
| Rated current, max. number of poles (Tu=20°C) | 29 A | Rated current, min. number of poles (Tu=40°C) | 25 A |
| Rated current, max. number of poles (Tu=40°C) | 21 A | Rated voltage for surge voltage class / pollution degree II/2 | 630 V |
| Rated voltage for surge voltage class / pollution degree III/2 | 500 V | Rated voltage for surge voltage class / pollution degree III/3 | 400 V |
| Rated impulse voltage for surge voltage class/ pollution degree II/2 | 6 kV | Rated impulse voltage for surge voltage class/ pollution degree III/2 | 6 kV |
| Rated impulse voltage for surge voltage class/ contamination degree III/3 | 6 kV | Short-time withstand current resistance | 3 x 1s with 180 A |
| Creepage distance, min. | 8.1 mm | Clearance, min. | 6.5 mm |

### Rated data acc. to CSA

| | | | |
|---|---|---|---|
| Rated voltage (Use group B / CSA) | 300 V | Rated voltage (Use group C / CSA) | 300 V |
| Rated voltage (Use group D / CSA) | 600 V | Rated current (Use group B / CSA) | 20 A |
| Rated current (Use group C / CSA) | 20 A | Rated current (Use group D / CSA) | 5 A |

### Rated data acc. to UL 1059

| | | | |
|---|---|---|---|
| Institute (cURus) | CURUS | Certificate No. (cURus) | E60693 |
| Rated voltage (Use group B / UL 1059) | 300 V | Rated voltage (Use group C / UL 1059) | 300 V |
| Rated voltage (Use group D / UL 1059) | 600 V | Rated current (Use group B / UL 1059) | 20 A |
| Rated current (Use group C / UL 1059) | 20 A | Rated current (Use group D / UL 1059) | 5 A |
| Creepage distance, min. | 11.2 mm | Clearance distance, min. | 6.5 mm |
| Reference to approval values | Specifications are maximum values, details - see approval certificate. | | |

### Packing

| | | | |
|---|---|---|---|
| Packaging | Box | VPE length | 168.00 mm |
| VPE width | 121.00 mm | VPE height | 38.00 mm |

### Important note

| | |
|---|---|
| IPC conformity | Conformity: The products are developed, manufactured and delivered according international recognized standards and norms and comply with the assured properties in the data sheet resp. fulfill decorative properties in accordance with IPC-A-610 "Class 2". Further claims on the products can be evaluated on request. |
| Notes | • Additional variants on request<br>• Gold-plated contact surfaces on request<br>• Rated current related to rated cross-section & min. No. of poles.<br>• P on drawing = pitch<br>• Rated data refer only to the component itself. Clearance and creepage distances to other components are to be designed in accordance with the relevant application standards.<br>• In accordance with IEC 61984, OMNIMATE-connectors are connectors without breaking capacity (COC). During designated use, connectors are not allowed to be engaged or disengaged when live or under load<br>• Long term storage of the product with average temperature of 50 °C and maximum humidity 70%, 36 months |

### Classifications

| | | | |
|---|---|---|---|
| ETIM 6.0 | EC002637 | ETIM 7.0 | EC002637 |
| ETIM 8.0 | EC002637 | ETIM 9.0 | EC002637 |

# SL 7.62HP/03/90G 3.2SN OR BX

**Weidmüller Interface GmbH & Co. KG**
Klingenbergstraße 26
D-32758 Detmold
Germany

www.weidmueller.com

## Technical data

| | | | |
|---|---|---|---|
| ETIM 10.0 | EC002637 | ECLASS 9.0 | 27-44-04-02 |
| ECLASS 9.1 | 27-44-04-02 | ECLASS 10.0 | 27-44-04-02 |
| ECLASS 11.0 | 27-46-02-01 | ECLASS 12.0 | 27-46-02-01 |
| ECLASS 13.0 | 27-46-02-01 | ECLASS 14.0 | 27-46-02-01 |
| ECLASS 15.0 | 27-46-02-01 | | |

# SL 7.62HP/03/90G 3.2SN OR BX

**Weidmüller Interface GmbH & Co. KG**
Klingenbergstraße 26
D-32758 Detmold
Germany

www.weidmueller.com

## Drawings

### Product image

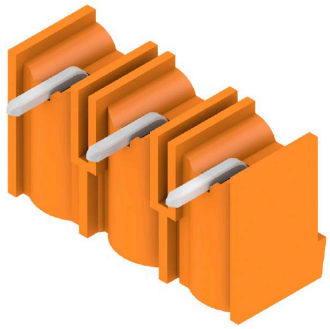
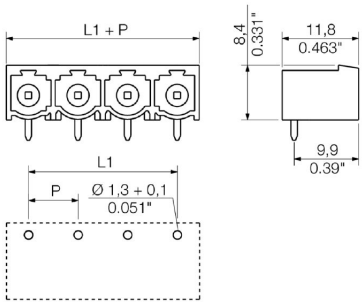
### Dimensional drawing